Petra Engineering Industries Co.

APSa CATALOG

Chillers R134a
50/60 Hz — Imp

Air Cooled Water Chiller
with Semi-Hermetic Screw Compressor

44 - 525 @ 50 Hz
50 - 600 @ 60 Hz

TABLE OF CONTENTS

INTRODUCTION

PETRA's Air-Cooled Liquid chillers (APSa) with semi-hermetic screw compressors and R134-a refrigerant, offer a wide range of sizes to meet customer requirements for different applications.

APSa chillers offer state of the art low sound, reliability, high energy efficiency and small physical footprint.

PETRA's APSa chillers are designed to be shipped as a complete factory package which are 100% run tested in the factory. Unit capacities range from (44 - 525) nominal tons at 50 Hz and from (50 - 600) nominal tons at 60 Hz.

APSa chillers consist of low-pressure drop coolers and V- shaped condenser coils to maximize airflow.

PETRA's APSa chillers are equipped with a microprocessor controller with unsurpassed features capable of managing the unit performance for optimum efficiency at both full load and part load values.

NOMENCLATURE

APSa 100-2 AC 1

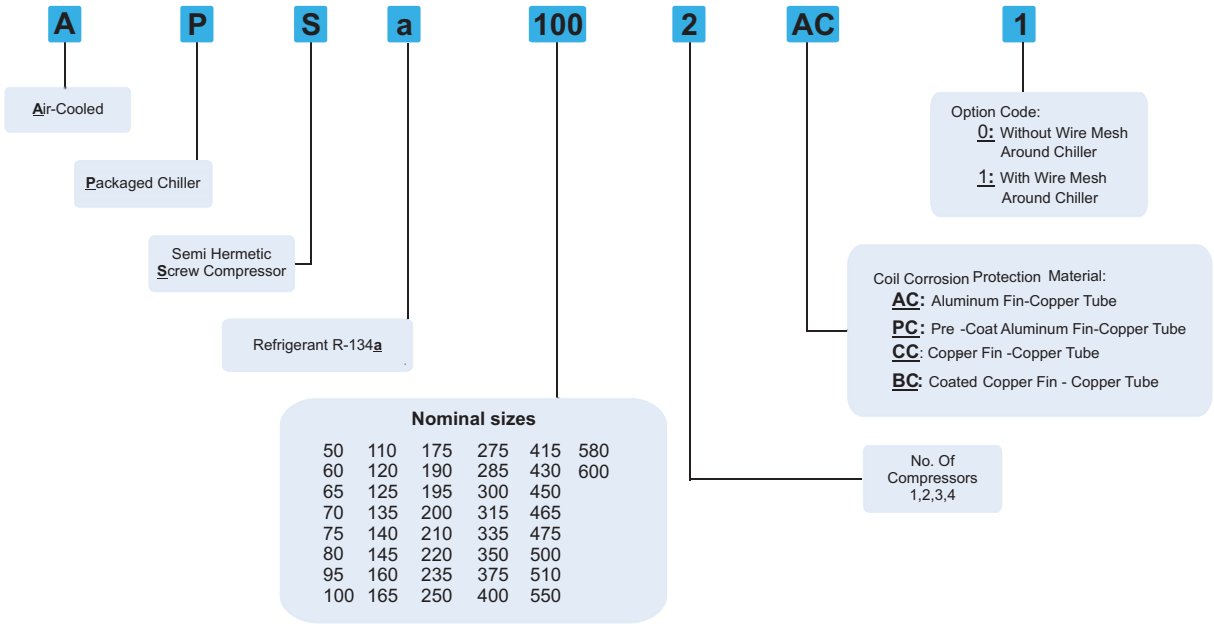

OUTSTANDING FEATURES

Superior Efficiency

The APSa series exceeds the new ASHRAE 90.1 efficiency levels at both full and part load efficiency.

Low Noise Chillers

The APSa chillers offer low sound power levels, measured in accordance with the BS ISO 3744 standard.

Compact Physical Footprint

The APSa chillers feature compact footprints and the possibility for close-spacing installation to serve the areas that have space constraints.

Outstanding Finishing

- All copper pipes and headers are Acra Clad after being cleaned, to maintain pipe material and brazing protected against all external conditions.
- All coil U-Bends are protected with a painted galvanized steel cover plate, The plate covers the whole U-Bend coil side.
- Suction lines and other insulated pipes are wrapped in cheese-cloth and epoxy painted. This gives further protection for the insulation against weather and other factors.

Quality Assurance

To ensure the best performance, all the chillers in the APSa series are:

- Factory-run tested
- Produced in an ISO 9001-2000 listed Manufacturing facility.
- Rated in accordance with ARI standard 550/590.

Easy Installation

Installation is made quick and easy with complete factory wiring, easy lifting provisions, factory installed options and start-up. To eliminate potential start-up problems, a complete factory-run test is performed on each unit.

Design Flexibility

The APSa chillers meet the same high engineering and performance standards that are characteristics of all PETRA air-conditioning systems. A wide range of capacities and options for the APSa series are available to meet precise design requirements.

FEATURES AND BENEFITS

Compressor

- Suction gas-cooled semi-hermetic screw compressor
- Universal application
- Rain-tight terminal box
- High-efficiency profile
- Double-walled pressure - compensated rotor housing, which is extremely stable and results in additional sound attenuation
- Proven, long - life bearings with pressure unloading
- Optimized oil management. Built in directly flanged on
- Oil separator, long life fine filter mesh and magnets on oil circuit, pressure relieved bearing chamber ensures minimum refrigerant dilution in the oil
- Large volume motor for part winding or Start-Delta with integrated PTC sensor in each winding
- Intelligent electronics including thermal motor temperature monitoring phase sequence monitoring, manual reset lock-out and discharge temperature protection by PTCs sensors
- Dual capacity control with infinite and slide control
- Automatic start unloading
- Discharge shutoff valve and discharge check valve
- Rubber-in-shear isolation
- Oil level switch, high efficiency suction strainer, oil strainer crank case heater and built in safety pressure relief valve

Condenser

- PETRA'S air-cooled condenser coils are designed to deliver their duties with optimum performance for all design conditions. Coils are manufactured from seamless copper tubes mechanically expanded into aluminum fins.
- All coils are air pressure tested at 450 Psi, under water to avoid leakage. They also undergo dry cleaning after manufacturing for optimum system cleanness.
- Type-L, heavy wall, seamless copper tubes are provided for the coil headers. The condenser coils are hydrostatic pressure tested in accordance with the UL 1995 standard.

Direct Drive Condenser Propeller Fans

- All condenser fans are of the axial type, sickle - shape blades statically and dynamically balanced selected for optimum efficiency and for maximum sound power reduction.
- Fan blades are driven by external rotor motor type and protected by wire guard made from steel coated with electrostatic polyester powder coating-oven backed.

Condenser Fan Motor

- All fan motors are of high efficiency external rotor motor with permanently lubricated bearing.
- Six pole induction type motor.
- Motors are with class F insulation provided with inherent motor protection.

Coolers

- High efficiency shell and tube type coolers with inner grooved tubes to optimize the cooler's efficiency. Coolers are tested and stamped for refrigerant side working pressure of 225 Psi and for waterside working pressure of 150 Psi.
- These working pressures comply with applicable sections of the ASME standard, and the European codes of ISPESL and TUV.
- Cooler water baffles are fabricated from brass for maximum corrosion resistance.
- Coolers are provided with water vents and drain connection plugs and are insulated using (3/4 inch) closed cell foam insulation as a standard insulation thickness.
- Other thicknesses are available as options.

STANDARD FEATURES

Construction

- Galvanized C-channel chiller base with lifting lugs painted with Acrylic Polyurethane paint.
- V-shaped, air-cooled condenser allows less installation space requirements, covered with protective panels.
- Modular design with multiple compressor execution provides flexibility for varying load conditions and avoids total shut down of the chiller during servicing of any of the refrigeration circuits.
- Easily accessible system components
- Weather proof with ample space for easy access power and control panels
- Heavy duty mounting chassis for the whole unit coated with weatherproof, polyester powder electrostatic paint, oven-baked to ensure maximum gloss and hardness.
- Anti-vibration mounts under compressor (rubber pad type).

Refrigeration

- Independent refrigeration circuit per compressor
- Liquid, discharge and suction pipes are all of hard copper pipes. They are formed using the highly accurate CNC pipe bending machines in order to minimize pipe-brazed joints which in turn increases system reliability.
- Components of each refrigeration circuit:
  - Expansion valve
  - Liquid line solenoid valve
  - Liquid line shut off valve
  - Liquid line moisture indicator sight Glass
  - Replaceable core type filter
  - Fully charged unit with R134-a refrigerant
  - High safety pressure switches (capsule type; factory pre-set)
- Epoxy paint for all exposed copper piping system of the refrigeration circuit
- Liquid injection kit
- Stepless capacity control for each compressor (25-100)%

Electrical

- Inherent motor protection for each compressor Part winding start and Start-Delta.
- Inherent motor protection for each condenser fan motor
- Smart lead-lag operation for compressors.
- Compressor electronic current monitor and overload protection though controller.
- Free terminal for remote ON/OFF connection
- Free terminal for general alarm output
- High ambient kit
- Control voltage is 220-240V for all components
- Power supply monitor (phase failure relay)
  Single point power connection for each electrical panel (refer to electrical data tables)
- Circuit breaker for each compressor
- Starting contactors for compressors and condenser fan motors
- Automatic pump down control
- ON/OFF switch for each compressor
- Control circuit breaker for short circuit protection
- Short cycling protection for compressors (time delay)
- Control transformer sized to supply the needs of the control circuit, sourcing power from the main unit power connection.
- Microprocessor control for full management of the chiller operation and safety circuits

OPTIONAL FEATURES

Construction

- Chiller sound enhancement Options
  There are 3 options to enhance the chiller sound pressure level:
  - Compressor compartment with standard fan
  - Ultra low fan speed720 rpm/900 rpm (50/60Hz) and compressor with compartment
  - Special design fan blades with external rotor motor and compressor with compartment
- Coils protection material
  There are 3 options for coils material:
  - Polyurethane precoated aluminum fins with copper tubes
  - Copper fins with copper tubes
  - Polyurethane post coat copper fins with copper tubes
- Galvanized steel wire mesh guard around the chiller's perimeter
- Chiller Vibration Isolation:

The following options are available for chiller vibration isolation:

- Neoprene rubber pads
- 1 inch Spring isolator

Refrigeration

- Cooler tape heater: Factory installed heater to protect cooler from freeze-up at low ambient down to (-20°F).
- Ice storage option: Special chillers are available for this option, please consult the factory for more details.
- Glycol option: Used for applications requiring water outlet temperature below 40°F.
- Suction valves for compressors larger than 90 HP.
- Suction accumulator.
- Liquid receiver.
- High pressure relief valve.
- Pressure gauges (High + Low).
- Water flow switch: Required as a safety interlock to prevent operation of the unit without evaporator flow (available for field installation only).
- Electronic expansion valve.
- Cooler cladding can be aluminum, stainless steel or polyester painted (22 gauge) galvanized steel
- Cooler insulation:
- Cooler can be insulated with 1.5 inch or more thickness closed cell foam insulation.

Electrical

- Low ambient head pressure control
  If the chiller is intended for use in low ambient conditions (below 7°C), low ambient control must be added. This can be achieved by varying the speed of the condenser fan motor by using a variable frequency drive. The speed of the condenser fan motor can be regulated with reference to the high-pressure sensor to maintain constant condensing pressure in the condenser.
- Unit mounted fused or non-fused disconnect service switch with external handle to isolate unit from power for servicing.
- Ground current protection for whole unit power supply. The current is monitored by toroidal coils around the power leads
- Building automation system connection
- External overload for each compressor
- External overload for condenser fans
- Ampere meter and/or voltmeter installed on the electric panel door
- Circuit breaker for condenser fan motors
- Main power circuit breaker for the whole unit with door isolator

MICROPROCESSOR CONTROLLER

The PETRA standard controller, for the air cooled screw compressor chillers is a rugged
microprocessor based controller that is built for the hostile environment of the HVAC industry.
It is designed to provide primary control, interface with building management systems and communicate both locally and remotely.
The PETRA controller provides flexibility with setpoints and control options that can be selected prior to commissioning a system or when the unit is live and functioning. The user is provided with the exact knowledge of what the system is doing by displaying meaningful control status names. This, together with the history status of all the inputs and outputs plus alarm information, provided in simple English,
provides excellent user and/or machine interface. Displays, alarms and other interfaces are accomplished in a clear and simple language that informs the user as to the status of the controller.
The controller panel consists of a master micro controller along with a keypad and display.

Complementing the micro controller are MCS-I/O, MCS-RO8 and MCS-SI16 expansion boards.
This allows for system expansion to a maximum of 48 inputs and 48 outputs.

Keypad/LCD Specifications

LCD Display using a (128 x 64 dot pixel STN) monochrome graphics LCD with 2.8" diagonal viewing area, color white characters on a blue background (Reversible).

PC-Connect

The optional MS Windows based system, PC-Connect, will provide local HVAC/R personnel as well as building management personnel with complete information on the unit's current status, alarms, set points, run times, cycles, etc. In addition, graphing is available from stored history data as well as current dynamic graphing.

MICROPROCESSOR CONTROLLER

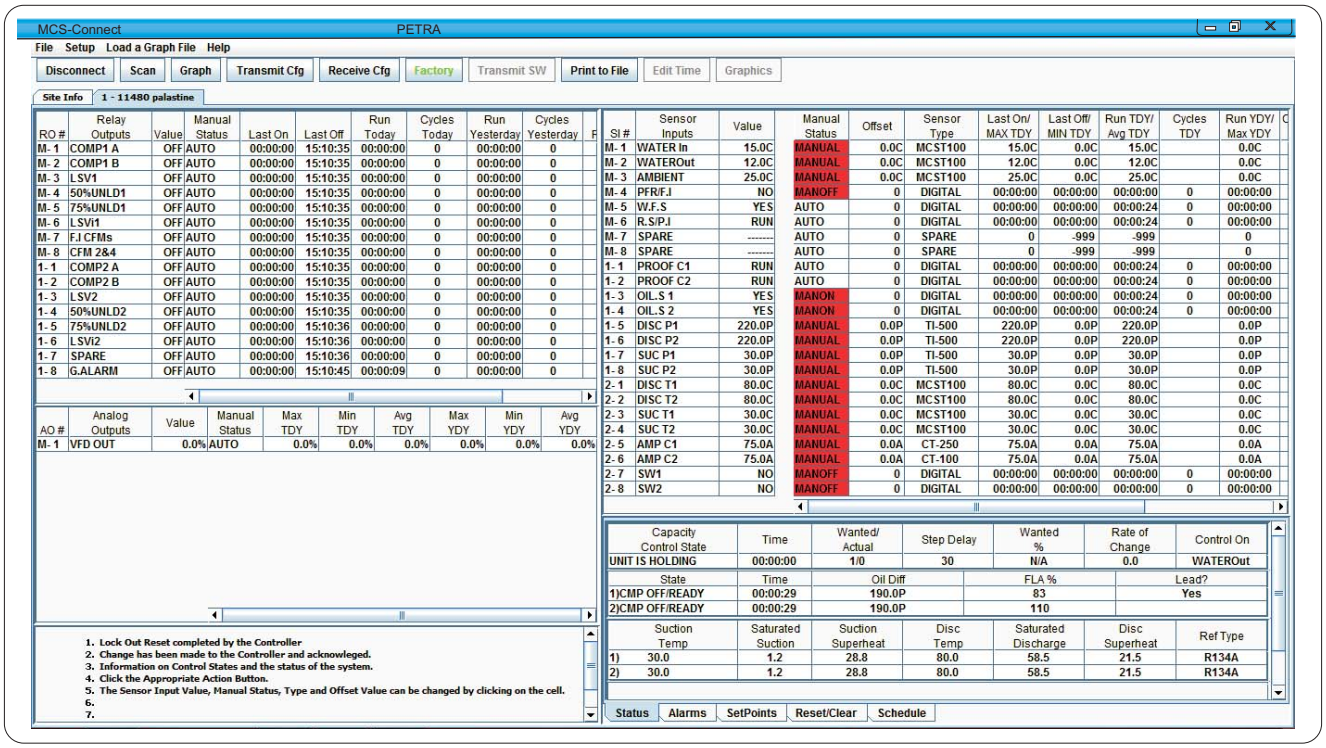

A screen shot showing various status information
MS-Windows © by Microsoft Corporation.

Displayed Data

- Leaving/Entering water temperature
- Ambient temperature
- Compressor discharge pressure/temperature
- Compressor suction pressure/temperature
- Compressor drawn current
- Suction/Discharge super heat
- Compressor load percentage
- Saturated suction/discharge
- Compressor oil diff
- Compressor timers
- Digital input status
- Output relays status
- Protections status
- Historical alarm
- Schedule
- Adjustable setpoint

System Control

The unit may be started or stopped manually, or through the use of an external signal from a Building Automation System. In addition, the controller may be programmed with daily and yearly start-stop schedule management.

Capacity Control Strategy

This control strategy is based on developing a control zone and then to step the compressor(s) through their stages to maintain the control sensor reading within this zone. To accomplish this, the system will constantly monitor the control value, its rate of change and position in relation to the control zone.

Soft Load Function

The compressors will start un-loaded to ensure soft start function, and then it will start loading gradually and according to load request, to prevent sudden load changing and save energy.

Compressor Efficiency

Because the most efficient compressor performance is at 100% load, PETRA has developed its own load/un-load strategy to provide an efficient performance. The number of compressors operating and the load percentage of each compressor will be monitored to achieve what is called the Optimum Capacity Limit to switch off compressors. Action will be taken after a certain programmable time delay.

Capacity Control Strategy

Compressor selection (activation) will depend on operating hours (automatic lead-lag management) to maintain the same operating hours for each compressor. Also, manual selection is possible.
In addition, the compressor's advanced time delay management avoids frequent ON/OFF switching for the compressor which ensures long life operation.

Head Pressure Control

PETRA provides analog output signals for fan speed controller (Option)

System Protections

PETRA provides special advanced software designed to be proactive; that is, to take corrective action to keep a safety condition from occurring. If a safety does occur, the software attempts to restart the unit when the system returns to normal. This approach eliminates most, if not all of the nuisance alarms that occur.

Alarms and Safeties

- Cutout and Un-loading:
- High discharge pressure
- High discharge temperature
- Low suction pressure
- Low suction temperature
- Freeze state
- High ampere state

Other Alarms and Safeties

- Low discharge pressure
- Unsafe suction pressure
- Unsafe discharge pressure
- Flow switch (No flow protection)
- Phase loss protection
- Low differential oil pressure
- Unsafe oil pressure
- Low oil level
- Motor temperature
- Low motor amps
- Probe error alarm

Communications & Building Management System

PETRA provides the user with **two options** in communicating with a Building Management
System, as follows:

MCS 485 Network with local Rs232 communications:

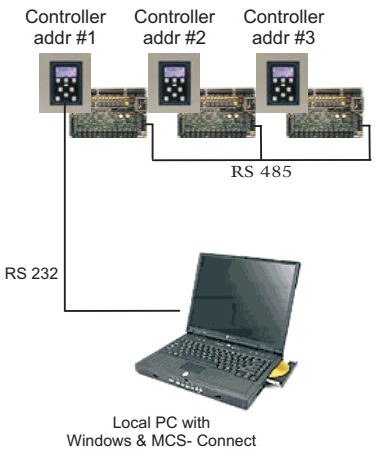

MCS 485 Network with local Remote modem communications:

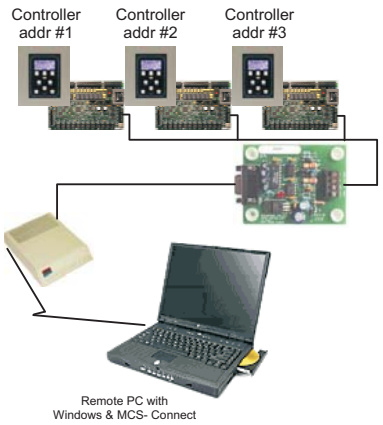

A. Communications

Within the communications structure there are two options as follows:

1. RS-232
   This is usually used to connect to:
   - A PC communicating at 19,200 baud via the MS Windows© based software package,'PC- Connect'.
   - A modem communicating remotely over the telephone network at 14,400 baud.
2. RS-485
   A three-position terminal block used to communicate with a Building Management System. As part of this capability BacNet, MODBUS, Johnson Controls N2 built in controllers and LON Talk Communications capabilities are available Through Lon card option

B. Hard Wire

Within the hard wire structure there are six features as follows:

1. RUN / STOP - (BMS to controller)
2. EMER. STOP - (BMS to controller)
3. CHILLED WATER RESET - (BMS to controller)
4. DEMAND LIMITING - (BMS to controller)
5. COMPRESSOR RUN - (controller to BMS)
6. ALARM - (controller to BMS)

SEQUENCE OF OPERATION

- The APSa chiller depends on its on-board microprocessor for control. For initial start-up, the following conditions must be met:
- Chilled water pump-running
- Chilled water flow switch-made
- Customer control contact-closed
- Compressor switches-ON
- Control circuit breaker-ON
- Main system voltage-ON
- All safety conditions-satisfied
- Compressor time delay-elapsed
- Leaving chilled water temperature-

Setpt	Value	Description	
# 2	(3.0 °F)	Cntrl Zone+	(46.0°)
# 1	(43.0°F)	Target	(43.0°)
# 3	(1.0°F)	Cntrl Zone-	(42.0°)

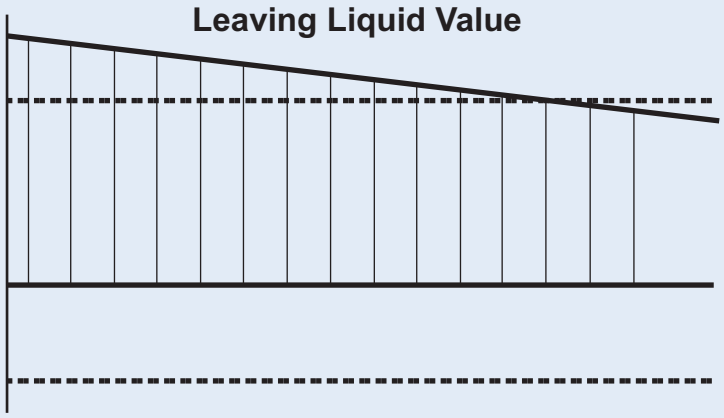

The system will attempt to keep the control value within the control zone that has been developed by calculating the required system capacity. The system's capacity will be based on the number of circuits (compressors) that are required to operate. The system will adjust the required capacity between the minimum and the maximum values. All the compressors that are operating will be synchronized to meet the system's capacity. When the maximum capacity value has been reached, an additional compressor, if available, will be required to operate. The number of compressors required to operate will be increased by one and the system's capacity will be set to the minimum value and the sequence will begin again.

The number of compressors operating and the load percentage of each compressor will be monitored to achieve what is called the Optimum Capacity Limit to switch off compressors. Action will be taken after a certain programmable time delay.

When the minimum capacity value has been reached, a compressor will be turned off. The number of compressors required to operate will be decreased by one and the system's capacity will be set to the maximum value and the sequence will began again.
The compressor slide control is based on the current drawn from that compressor. For example, if the current drawn is greater than the capacity indicated, then the compressor is unloaded. Conversely, if it is less, then it is loaded.

The compressors that are operating can be loaded, where their load solenoids are pulsed; unloaded where their unload solenoids are pulsed or in a hold state, where no action is required.(compressor) reflects this action.

When the water temperature falls below the setpoint, the compressor will shut down.

APPLICATION DATA

Unit Leveling

Unit must be leveled when installed to ensure proper oil return to the

Fluid Temperature

1. Maximum leaving chilled fluid temperature for unit is 50ºF. For continuous operation, it is recommended that inlet fluid temperature does not exceed 60ºF (If continuous operation is required for inlet water temperature above 60ºF, please refer to PETRA factory).
2. Minimum leaving chilled fluid temperature for a standard unit is 40ºF (for lower leaving temperature contact PETRA factory).

Cooler Flow Range

Chiller ratings and performance data pertain to a cooling temperature rise of 10°F. Chillers may be suitable for operation in a range from 5.4 to 14.5°F temperature rise without adjustment, provided flow limits are within minimum limits on outlined in table below. High flow rate is limited by pressure drop that can be tolerated.

Minimum Cooler Flow: Based on the maximum permissible ΔT across the cooler 14.5°F.

Maximum Cooler Flow: Based on Minimum Permissible ΔT across the cooler 5.4°F.

Fluid loop volume: To obtain proper temperature control,the loop fluid volume must be at least 2.4 GPM/Ton based on a 10ºF difference in water/fluid temperature for chiller nominal capacity in air conditioning applications, taking into consideration the minimum system volume.

Cooler protection: A protection against low ambient freeze-up is required for ambient temperatures below 32ºF .

Protection should be in the form of:

1- Inhibited ethylene glycol or any other suitable glycol (Option).

2- Cooler is equipped with an electric heater tape that helps prevent freeze-up (Option).

APPLICATION DATA

Altitude correction factors

Capacity correction factors must be applied to standard ratings at altitudes above sea level using the multipliers on the right:

Altitude [ft]	Correction Factor
Sea level	1
1000	0.995
2000	0.99
3000	0.985
4000	0.98
5000	0.973
6000	0.967
7000	0.96
8000	0.95

High Ambient Temperature

High outdoor ambient chiller start-up and operation is possible for chillers at ambient temperatures up to 125°F at nominal voltage (for standard units). For higher ambient temperature, please refer to PETRA factory.

Condenser Airflow

Any restrictions on the unit's fan airflow will affect the unit's capacity, condenser head pressure, and compressor power input. Such restrictions (i.e. not providing vertical clearance or lateral clearance, insufficient unit-to-unit clearance) will cause warm air re-circulation or coil starvation. Minimum required operational and maintenance clearances around the unit are shown in the figure below.

Capacity Correction (Antifreeze)

Inhibited ethylene glycol (or any other suitable glycol or brine) should be used in installations where sub-freezing temperatures are expected (If this application is needed, please contact PETRA factory).

LEGEND	
1	ELECTRIC BOX
2	FREE SPACE FOR SERVICE
3	FLAT LEVELED FOUNDATION
4	COMPRESSOR

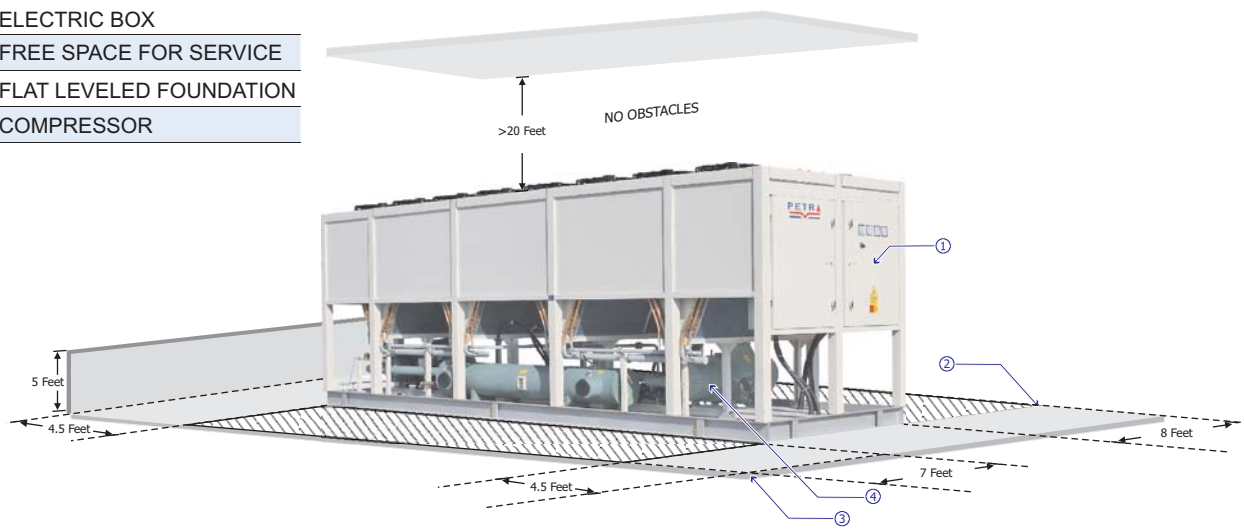

MODEL	Minimum cooler flowrate (GPM)	
	50Hz	60Hz
50-1	74.1	84.6
60-1	80.3	93.2
65-1	88.8	102.3
70-1	96.2	110
70-2	98	111.6
75-1	108.7	125.4
80-1	119.5	136.9
95-2	130.4	149.4
95-1	130.8	150
100-1	146.2	166.1
100-2	147.2	167.9
110-2	156	178.4
120-2	163.7	187
125-2	171.4	194.8
135-2	189	216.1
140-2	203.1	231.3
145-2	210.4	241
160-2	222.5	253.6
165-2	231.9	263.9
175-2	245.3	276.8
190-2	253.2	287.1
195-2	269.3	305
200-2	276.6	314.2
210-2	304.6	248.8
220-2	317.5	366
235-2	342.5	392.7
250-2	381.4	435.6
275-2	402.7	461.4
285-2	417.3	475.3
300-2	436.9	501.5
315-3	461.3	526.2
315-2	463.2	528.1
335-2	492.3	560.6
350-3	511.9	587.1
375-3	535.5	611.9
400-3	588.1	673
415-3	630.3	718.5
430-3	644	734.4
450-3	657.2	748
465-3	673.8	768.5
475-3	697.4	794.1
500-3	722	816.7
510-3	737.6	838.9
550-4	778.1	892.6
580-4	834.6	950.7
600-4	874.8	1006.6

MODEL	Mnimum loop volume (Gallon)	
	50Hz	60Hz
50-1	534.6	610.3
60-1	579	672.4
65-1	640.4	737.9
70-1	693.6	793.1
70-2	706.7	805.1
75-1	783.9	904.2
80-1	861.7	987.5
95-2	940.4	1077.2
95-1	943.7	1081.9
100-1	1054.5	1198.3
100-2	1061.9	1210.8
110-2	1125.1	1286.3
120-2	1180.5	1349
125-2	1236	1404.7
135-2	1362.8	1588.7
140-2	1464.7	1668.2
145-2	1517.2	1738.2
160-2	1604.7	1829.3
165-2	1672.4	1903.5
175-2	1769.3	1996.2
190-2	1826.2	2070.6
195-2	1942.3	2200
200-2	1995.1	2266
210-2	2197.1	2516
220-2	2290.2	2639.5
235-2	2470.1	2832.2
250-2	2750.4	3142
275-2	2904.1	3328
285-2	3009.7	3428.3
300-2	3150.9	3616.8
315-3	3327.1	3795.3
315-2	3340.4	3809.1
335-2	3550.9	4043.5
350-3	3692.3	4234
375-3	3862.2	4412.9
400-3	4241.6	4854.2
415-3	4546.2	5182.2
430-3	4644.7	529639
450-3	4739.9	5395.1
465-3	4859.4	5542.8
475-3	5030.1	5727.5
500-3	5207.1	5890
510-3	5319.8	6050.5
550-4	5611.8	6437.9
580-4	6019.5	6856.7
600-4	6309.3	7258.6

GENERAL DATA TABLES

Model	APSa	50-1	601	65-1	70-1	70-2	75-1	80-1	95-2	95-1	100-2	100-1
Power supply		See electrical data table										
Casing and finishing		Heavy gauge,galvanized steel,with oven-baked weatherproof,polyester powder electrostatic paint										
Compressor		Compact screw, semi hermetically sealed with flanged on oil separtor										
No.		1	1	1	1	2	1	1	2	1	1	1
Oil charge	Liter	16	16	16	16	8	15	18	14	20	16	20
Cooler		shell and tube										
No. of coolers		1										
Refrigerant		R134a										
Control		Expansion valve										
Refrigeration circuits		1	1	1	1	2	1	1	1	1	1	1
Water connectine size (Inlet \ outlet diameter)	inch	5\5	5\5	5\5	5\5	5\5	6\6	6\6	6\6	6\6	6\6	6\6
Condenser		Copper tubes-Aluminum fins										
No.		2	4	4	4	4	4	4	4	4	4	4
Fins per inch		14	12								14	12
Rows		4										
Total face area	Ft^2	60	120	120	120	120	120	120	120	120	120	120
Fan		Propeller (Axial)										
No.		2	4	4	4	4	4	4	4	4	4	4
Total air flow rate	CFM (50Hz)	35685	52941	52941	71370	71370	71370	71370	71370	71370	71370	71370
	CFM (60Hz)	40198	64062	64062	80397	80397	80397	80397	80397	80397	80397	80397
Approx.operating weight	Lb	4300	6119	6183	6251	6902	6946	7144	7850	7166	8291	7332

Model	APSa	110-2	120-2	125-2	135-2	140-2	145-2	160-2	165-2	175-2	190-2	195-2	200-2
Power supply		See electrical data table											
Casing and finishing		Heavy gauge,galvanized steel,with oven-baked weatherproof,polyester powder electrostatic paint											
Compressor		Compact screw, semi hermetically sealed with flanged on oil separtor											
No.		2	1+1	2	2	2	2	1+1	2	2	2	2	2
Oil charge	Liter	16	16+16	16	16	15	15	15+16	16	20	20	23	23
Cooler		shell and tube											
No. of coolers		1											
Refrigerant		R134a											
Control		Expansion valve											
Refrigeration circuits		2	2	2	2	2	2	2	2	2	2	2	2
Water connectine size (Inlet \ outlet diameter)	inch	6\6	6\6	6\6	8\8	8\8	8\8	8\8	8\8	8\8	8\8	8\8	8\8
Condenser		Copper tubes-Aluminum fins											
No.		6	6	6	6	6	8	8	8	8	10	8	10
Fins per inch		12				14	12					14	12
Rows		4											
Total face area	Ft^2	181	181	181	181	181	241	241	241	241	301	241	301
Fan		Propeller (Axial)											
No.		6	6	6	6	6	8	8	8	8	10	8	10
Total air flow rate	CFM (50Hz)	107055	107055	107055	107055	107055	142740	142740	142740	142740	178425	142740	178425
	CFM (60Hz)	120595	120595	120595	120595	120595	160794	160794	160794	160794	200992	160794	200992
Approx.operating weight	Lb	10011	9272	10143	10805	11422	13594	13814	14002	13858	15490	14333	15953

GENERAL DATA TABLES

Model	APSa	210-2	220-2	235-2	250-2	275-2	285-2	300-2	315-3	315-2	335-2	350-3
Power supply		See electrical data table										
Casing and finishing		Heavy gauge,galvanized steel,with oven-baked weatherproof,polyester powder electrostatic paint										
Compressor		Compact screw, semi hermetically sealed with flanged on oil separtor										
No.		2	2	1+1	2	1+1	2	2	1+2	1+1	2	2+1
Oil charge	Liter	20	20	28+20	28	28+28	28	28	23+20	28+28	28	20+28
Cooler		shell and tube										
No. of coolers		1										
Refrigerant		R134a										
Control		Expansion valve										
Refrigeration circuits		2	2	2		2	2	2	3	2	2	3
Water connectine size (Inlet \ outlet diameter)	inch	6\6	6\6	6\6	6\6	8\8	8\8	8\8	8\8	8\8	8\8	8\8
Condenser		Copper tubes-Aluminum fins										
No.		8	10	10	10	10	10	12	12	12	12	14
Fins per inch		12										
Rows		4										
Total face area	Ft^2	241	301	301	301	301	301	361	361	361	361	421
Fan		Propeller (Axial)										
No.		8	10	10	10	10	10	12	12	12	12	14
Total air flow rate	CFM (50Hz)	142740	178425	178425	178425	178425	178425	214110	214110	214110	214110	249795
	CFM (60Hz)	160794	200992	200992	200992	200992	200992	241191	241191	241191	241191	281389
Approx.operating weight	Lb	14361	16015	16692	17382	18853	19095	21267	21807	21433	21812	23281

Model	APSa	375-3	400-3	415-3	430-3	450-3	465-3	475-3	500-3	510-3	550-4	580-4	600-4
Power supply		See electrical data table											
Casing and finishing		Heavy gauge,galvanized steel,with oven-baked weatherproof,polyester powder electrostatic paint											
Compressor		Compact screw, semi hermetically sealed with flanged on oil separtor											
No.		1+2	3	3	3	2+1	2+1	1+2	3	3	4	4	4
Oil charge	Liter	20+28	28	28	28	28+28	28+28	28+28	28	28	28	28	28
Cooler		shell and tube											
No. of coolers		1									2		
Refrigerant		R134a											
Control		Expansion valve											
Refrigeration circuits		3	3	3	3	3	3	3	3	3	4	4	4
Water connectine size (Inlet \ outlet diameter)	inch	8\8	8\8	8\8	8\8	8\8	8\8	8\8	8\8	8\8	8\8	8\8	8\8
Condenser		Copper tubes-Aluminum fins											
No.		14	16	16	18	16	18	18	18	20	20	20	20
Fins per inch		12											14
Rows		4											
Total face area	Ft^2	421	481	481	542	481	542	542	542	602	602	602	602
Fan		Propeller (Axial)											
No.		14	16	16	18	16	18	18	18	20	20	20	20
Total air flow rate	CFM (50Hz)	249795	285480	285480	321165	285480	321165	321165	321165	356850	356850	356850	349999
	CFM (60Hz)	281389	321588	321588	361786	321588	361786	361786	361786	401985	401985	401985	396122
Approx.operating weight	Lb	24674	27320	27893	30429	28158	30738	31293	31503	33576	37761	38532	39463

MODELS LAYOUT

MODEL
APSa 50-1

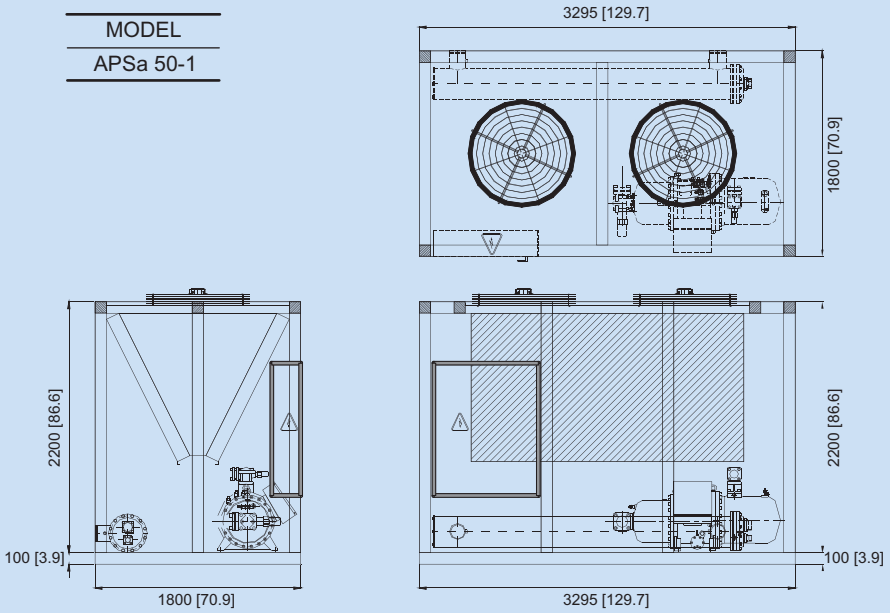

MODEL
APSa 60-1
APSa 65-1
APSa 65-1
APSa 70-1
APSa 75-1
APSa 95-1
APSa100-1

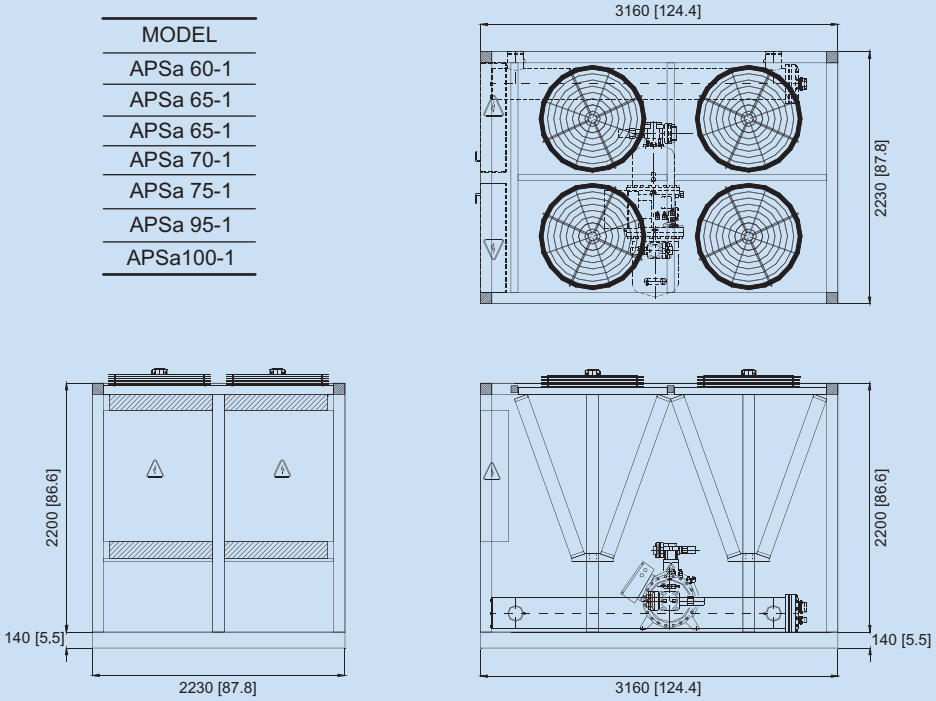

All dimensions are in mm [inch]

MODELS LAYOUT

MODEL
APSa 70-2
APSa 95-2
APSa 100-2

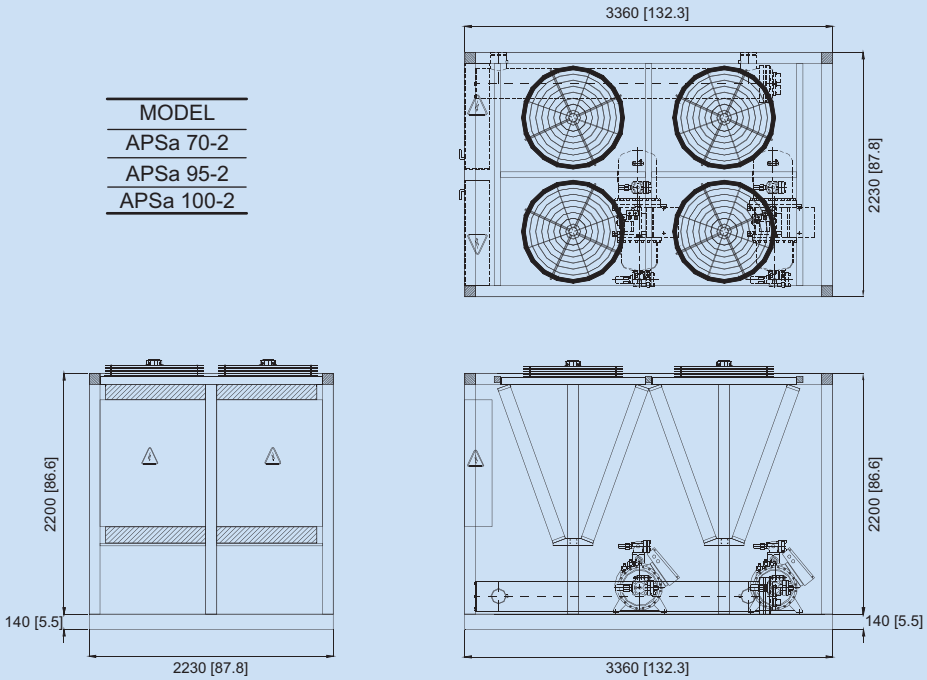

MODEL
APSa 110-2
APSa 120-2
APSa 125-2

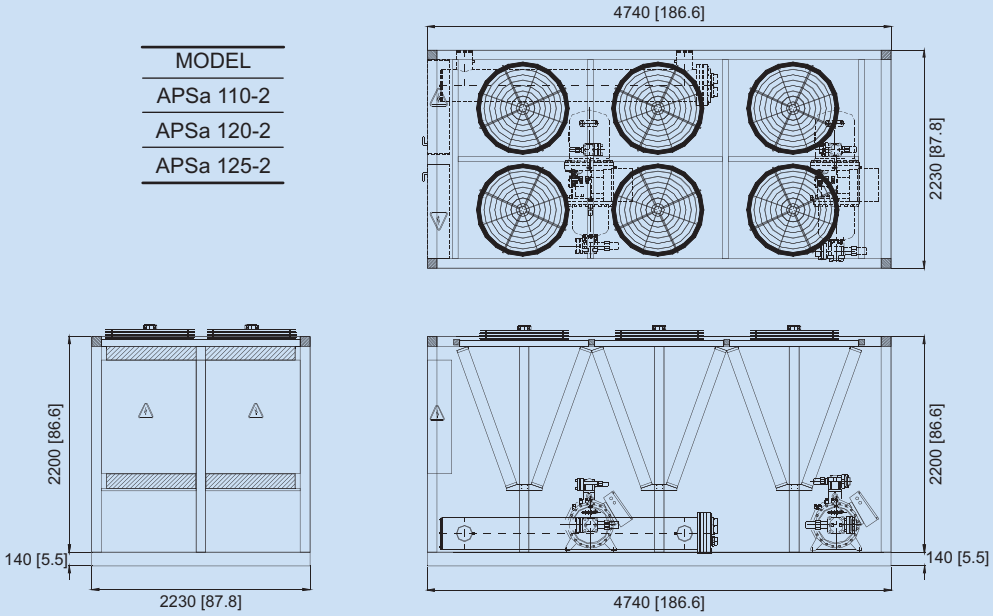

All dimensions are in mm [inch]

MODELS LAYOUT

MODEL
APSa 135-2
APSa 140-2

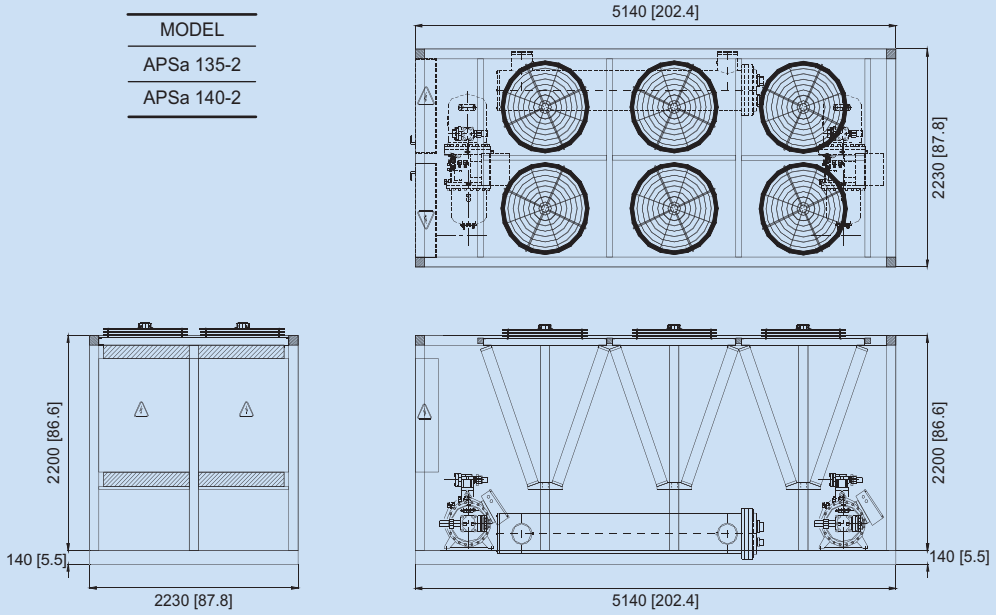

MODEL
APSa 145-2
APSa 160-2
APSa 165-2
APSa 175-2
APSa 195-2

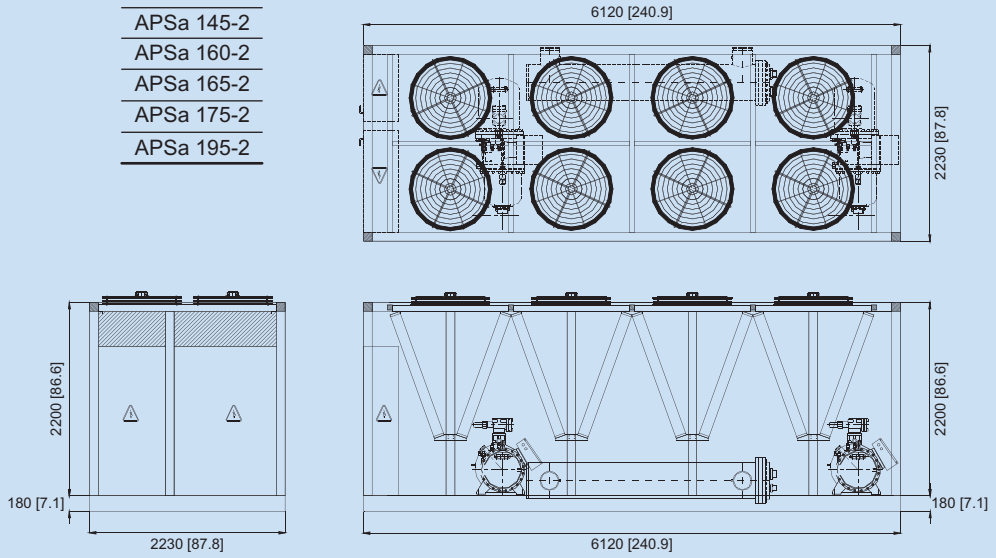

All dimensions are in mm [inch]

MODELS LAYOUT

MODEL
APSa 190-2
APSa 200-2

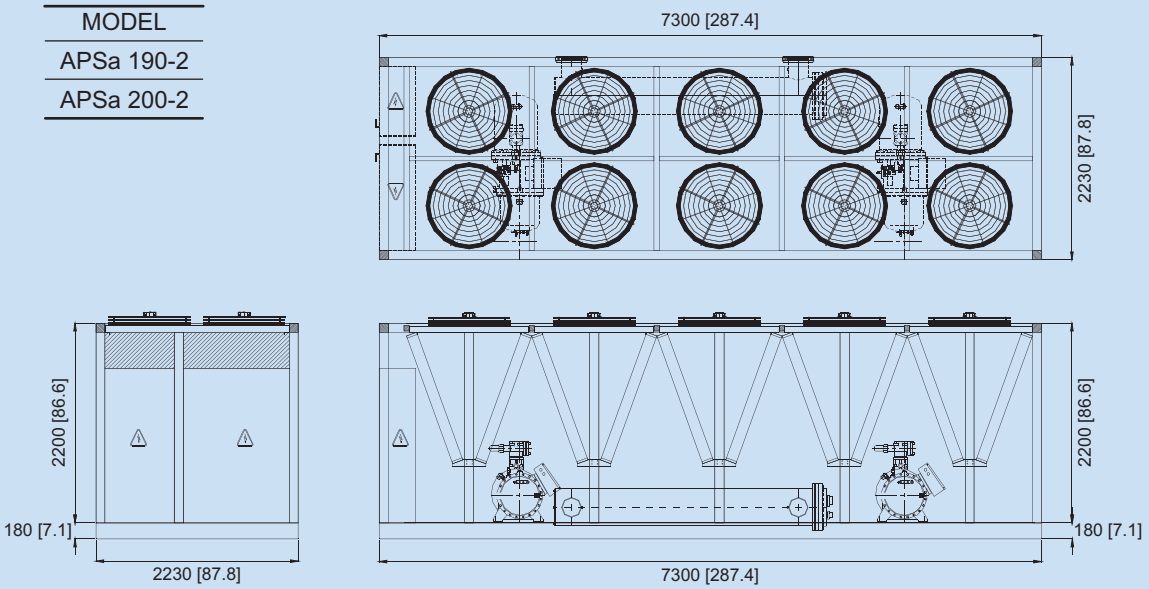

MODEL
APSa 210-2

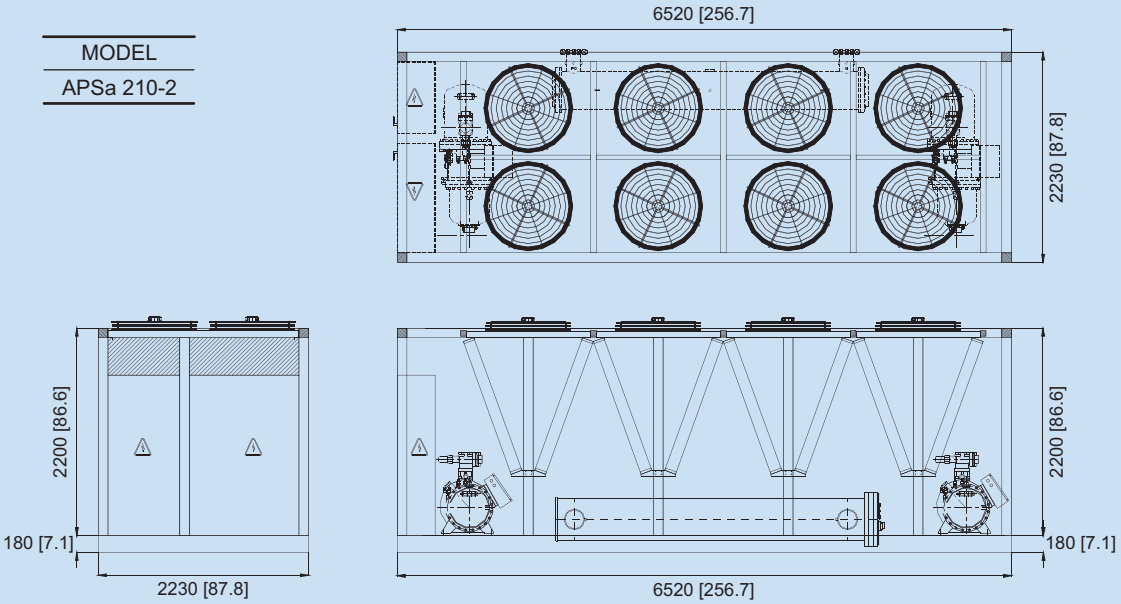

All dimensions are in mm [inch]

MODELS LAYOUT

MODEL
APSa 220-2

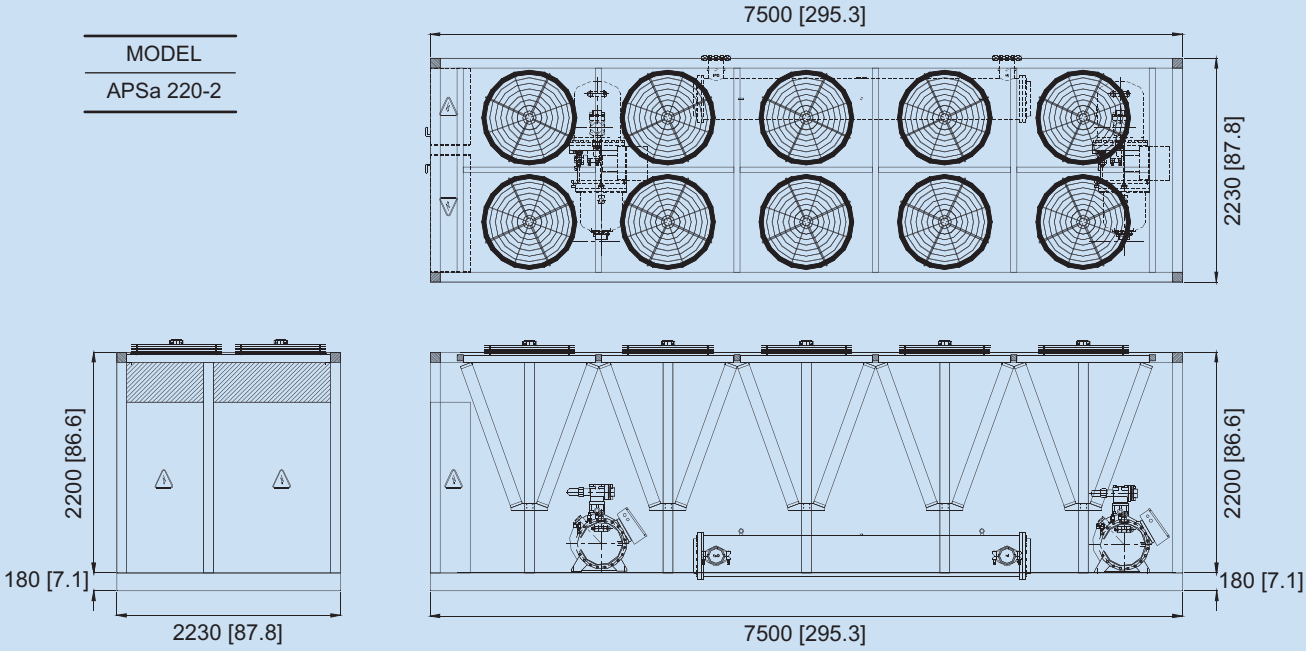

MODEL
APSa 235-2
APSa 250-2
APSa 275-2
APSa 285-2

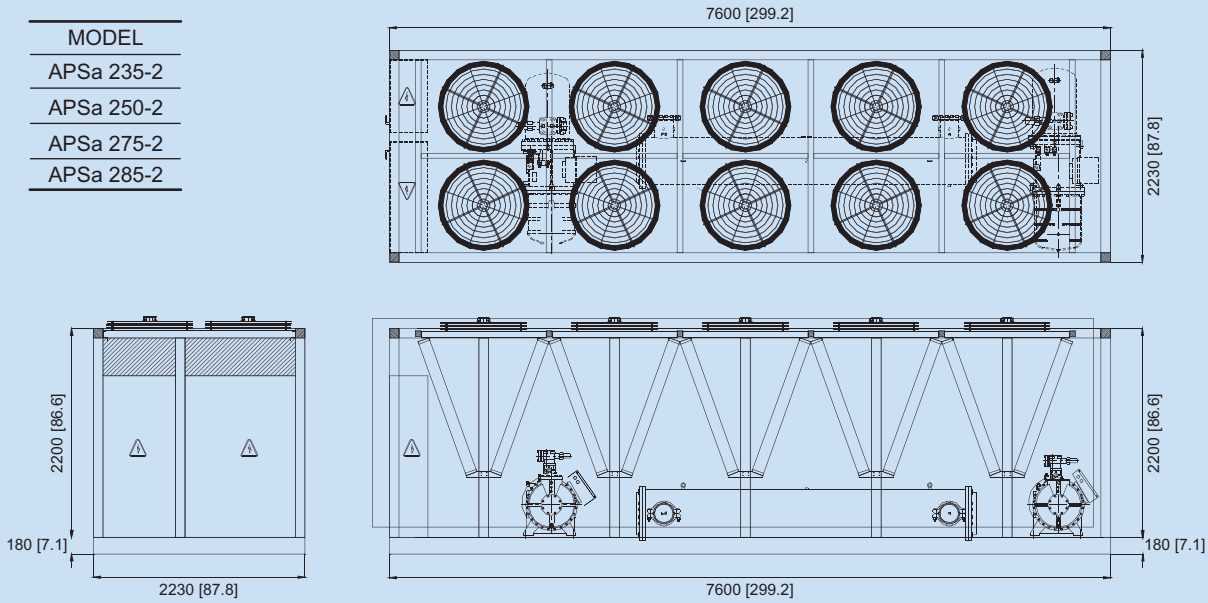

All dimensions are in mm [inch]

MODELS LAYOUT

MODEL
APSa 315-3

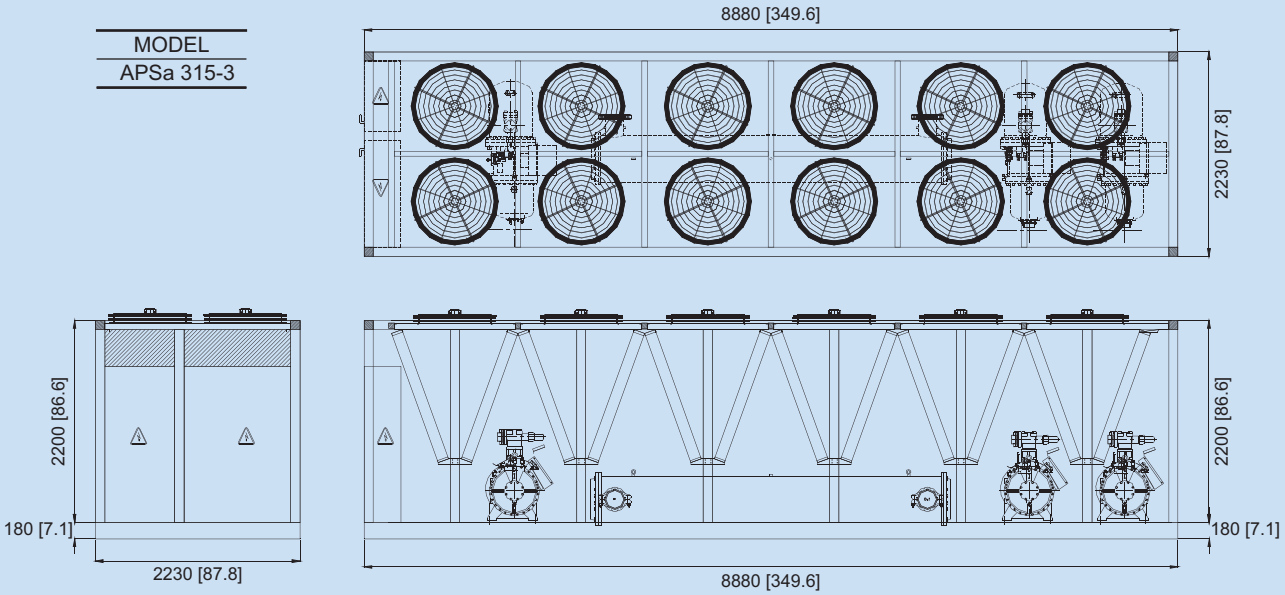

MODEL
APSa 300-2
APSa 315-2
APSa 335-2

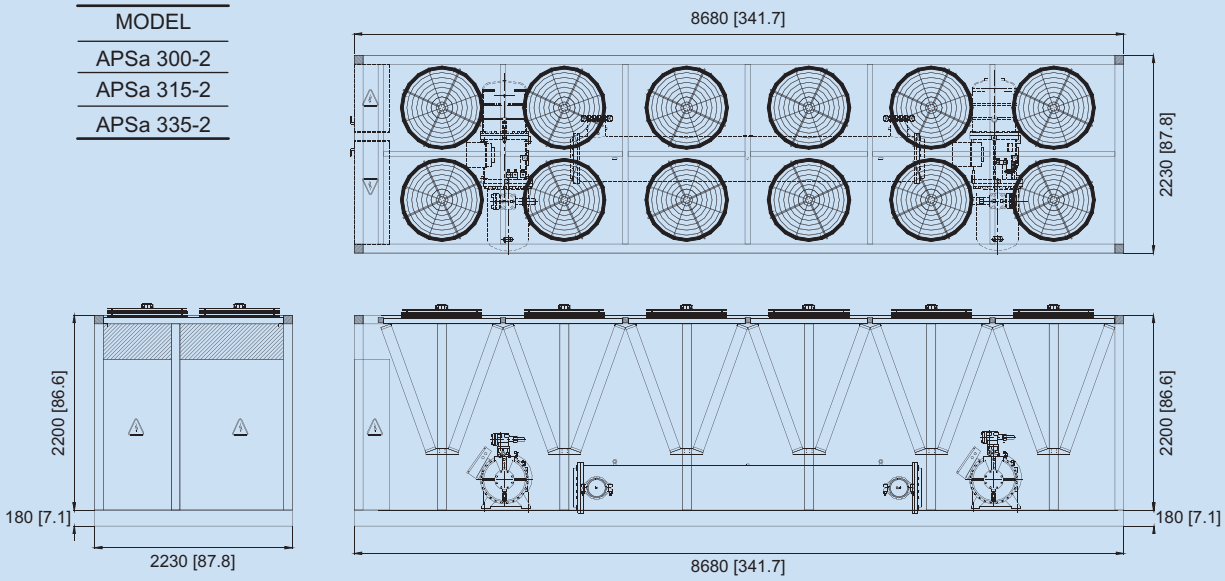

All dimensions are in mm [inch]

MODELS LAYOUT

MODEL
APSa 350-3
APSa 375-3

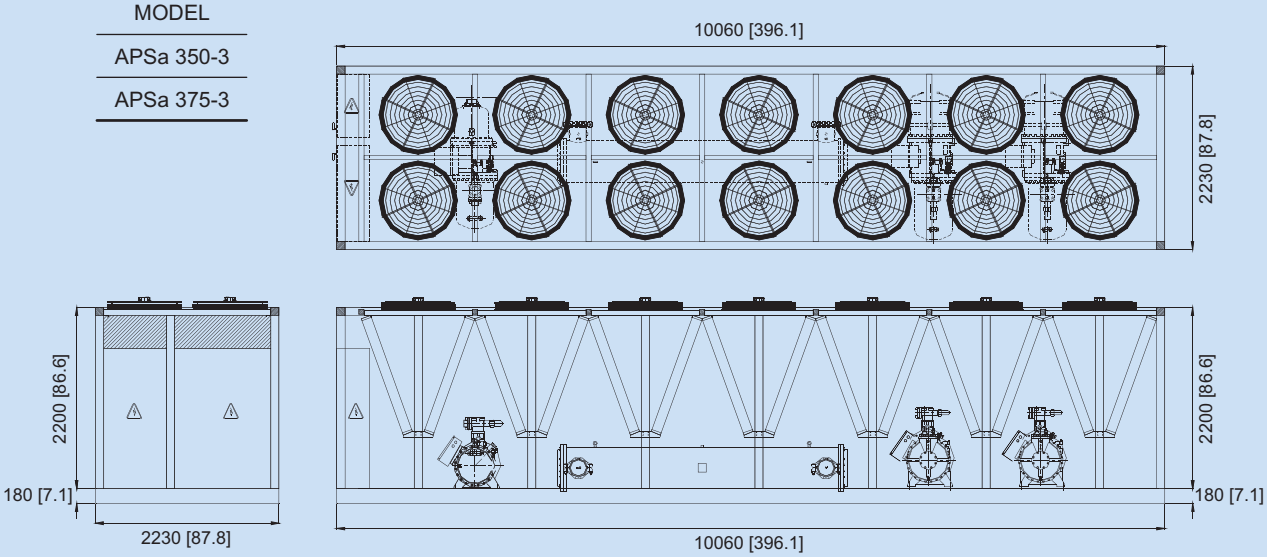

MODEL
APSa 400-3
APSa 415-3
APSa 450-3

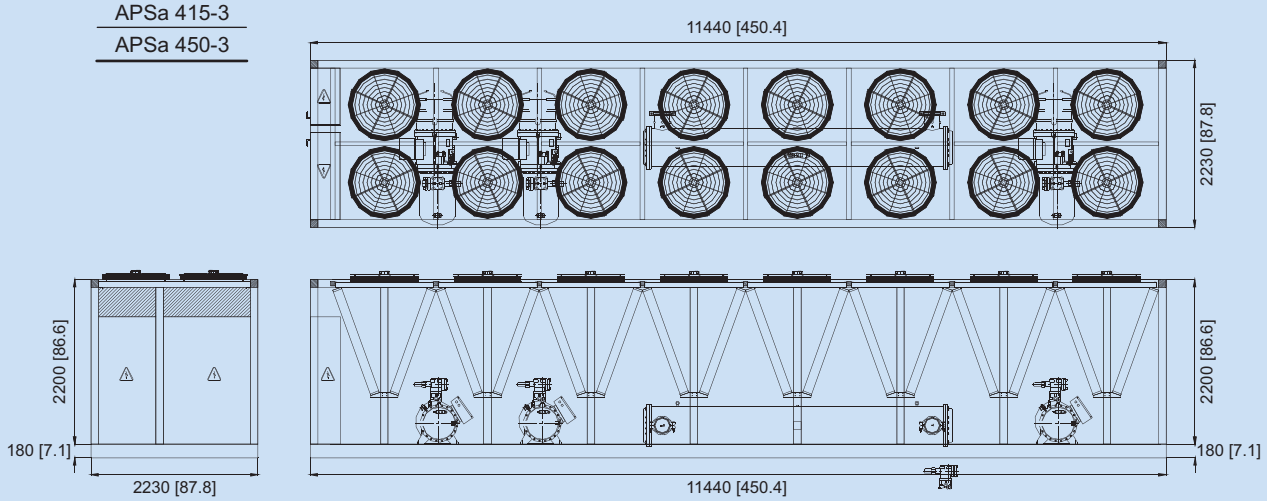

All dimensions are in mm [inch]

MODELS LAYOUT

MODEL
APSa 430-3
APSa 465-3
APSa 475-3
APSa 500-3

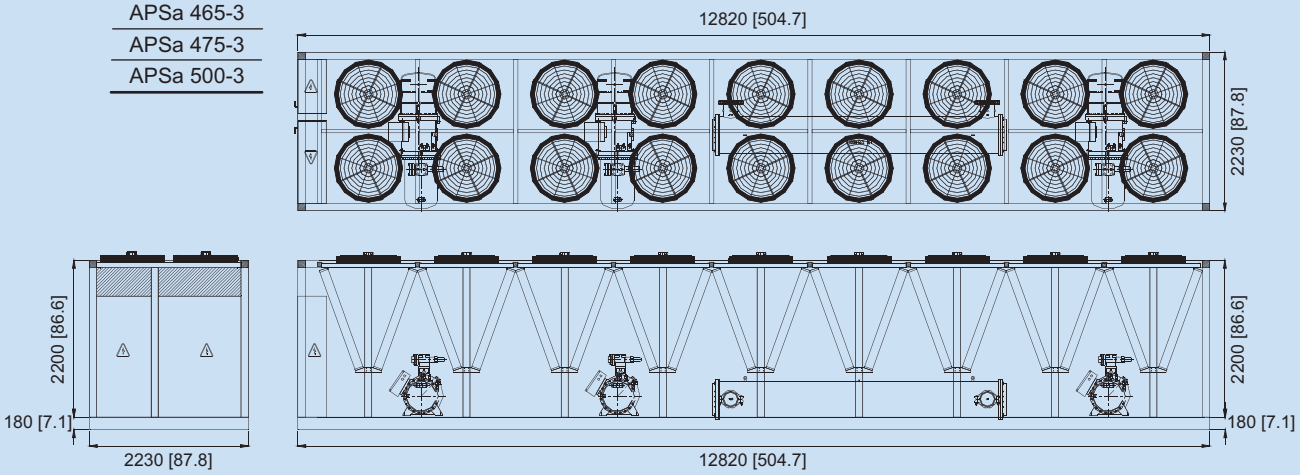

MODEL
APSa 510-3

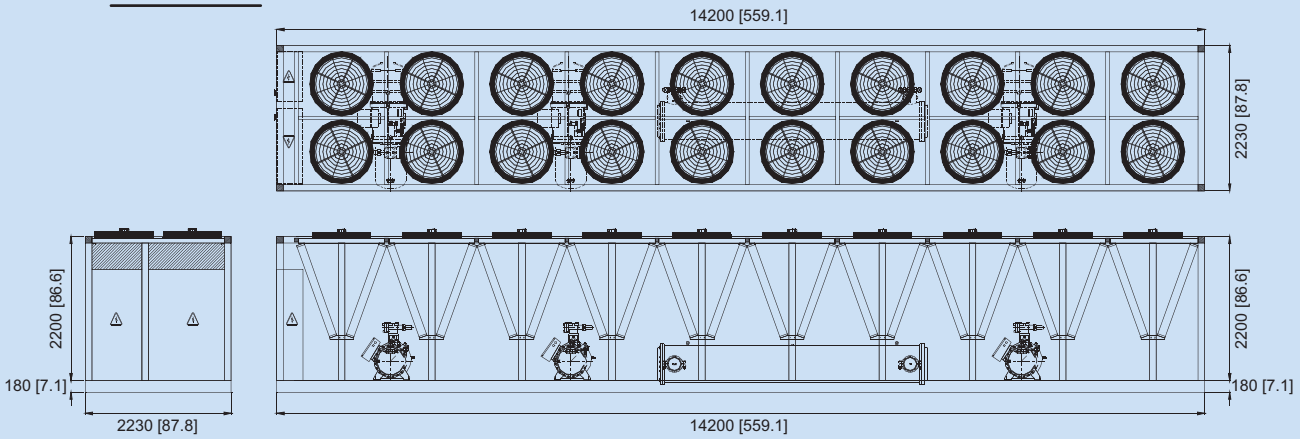

All dimensions are in mm [inch]

MODELS LAYOUT

MODEL
APSa 550-4
APSa 580-4
APSa 600-4

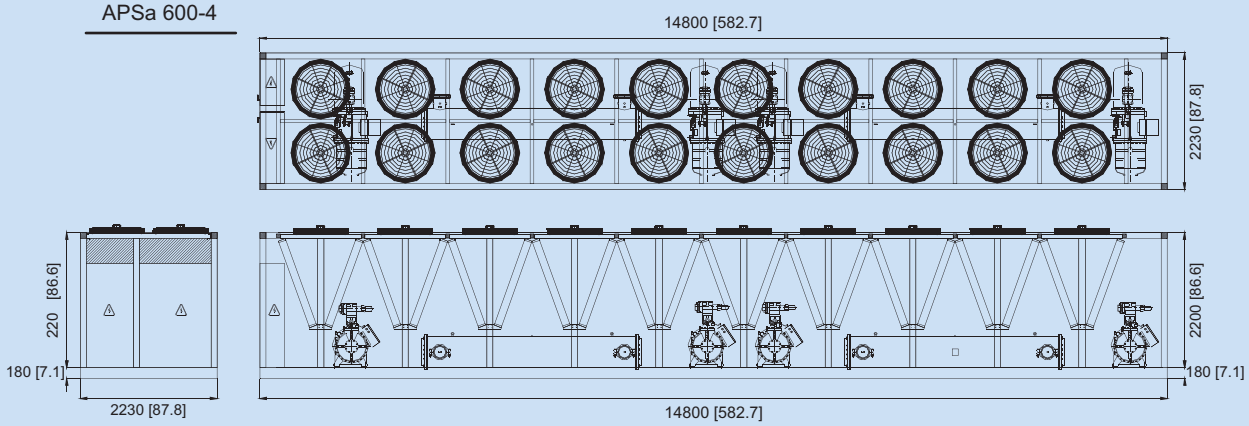

All dimensions are in mm [inch]

LOAD DISTRIBUTION

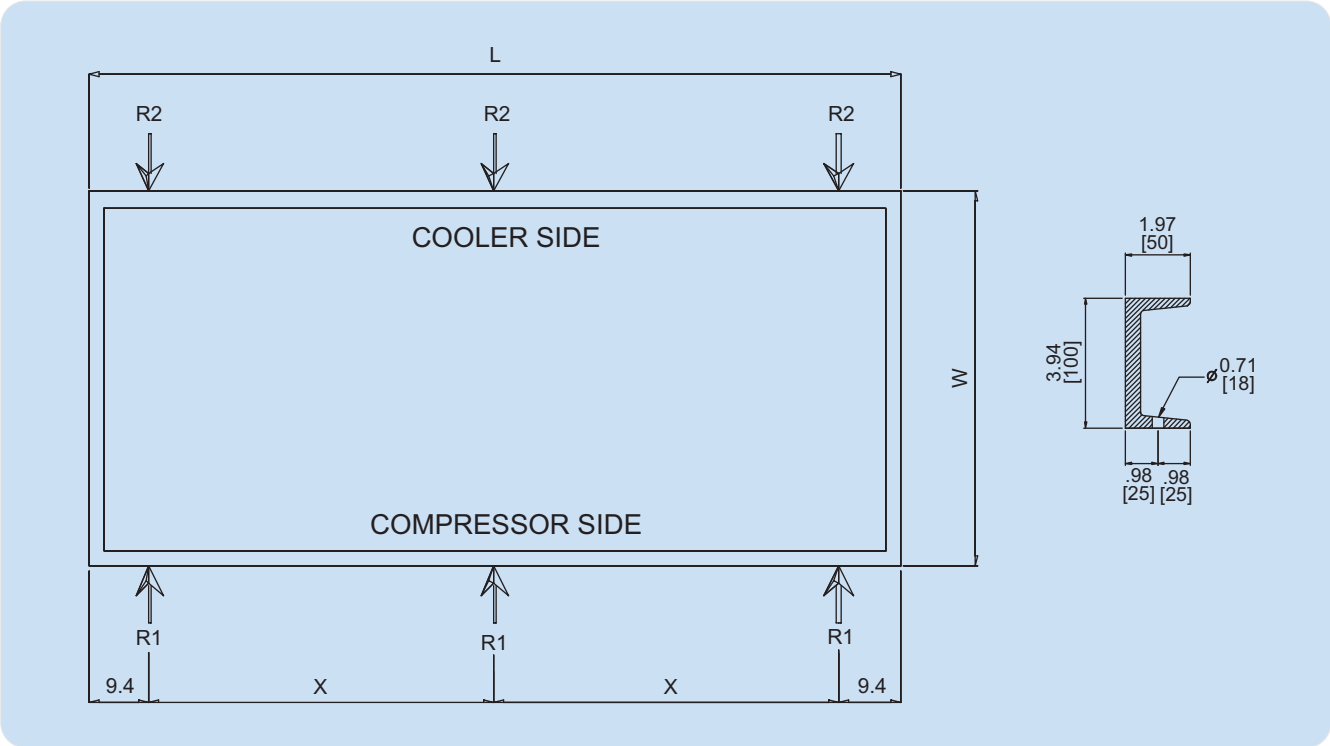

Model	L	W	N	X	N1	N2	R1	R2
50-1	129.7	70.9	2	55.4	3	3	745	688
60-1	124.4	87.8	2	52.8	3	3	1061	979
65-1	124.4	87.8	2	52.8	3	3	1072	989
70-1	124.4	87.8	2	52.8	3	3	1084	1000
70-2	132.3	87.8	2	56.7	3	3	1196	1104
75-1	124.4	87.8	2	52.8	3	3	1204	1111
80-1	124.4	87.8	2	52.8	3	3	1238	1143
95-1	124.4	87.8	2	52.8	3	3	1242	1146
95-2	132.3	87.8	2	56.7	3	3	1360	1256
100-1	124.4	87.8	2	52.8	3	3	1271	1173
100-2	132.3	87.8	2	56.7	3	3	1437	1326

W: BASE WIDTH [INCH]
L: BASE LENGTH [INCH]
N: NUMBER OF X DISTANCES
X: DISTANCE BETWEEN SUPPORTS [INCH]
N1: NO. OF SUPPORTS ON COMPRESSOR SIDE
N2: NO. OF SUPPORTS ON COOLER SIDE
R1: LOADS ON COMPRESSOR SIDE [Lb]
R2: LOADS ON COOLER SIDE [Lb]

LOAD DISTRIBUTION

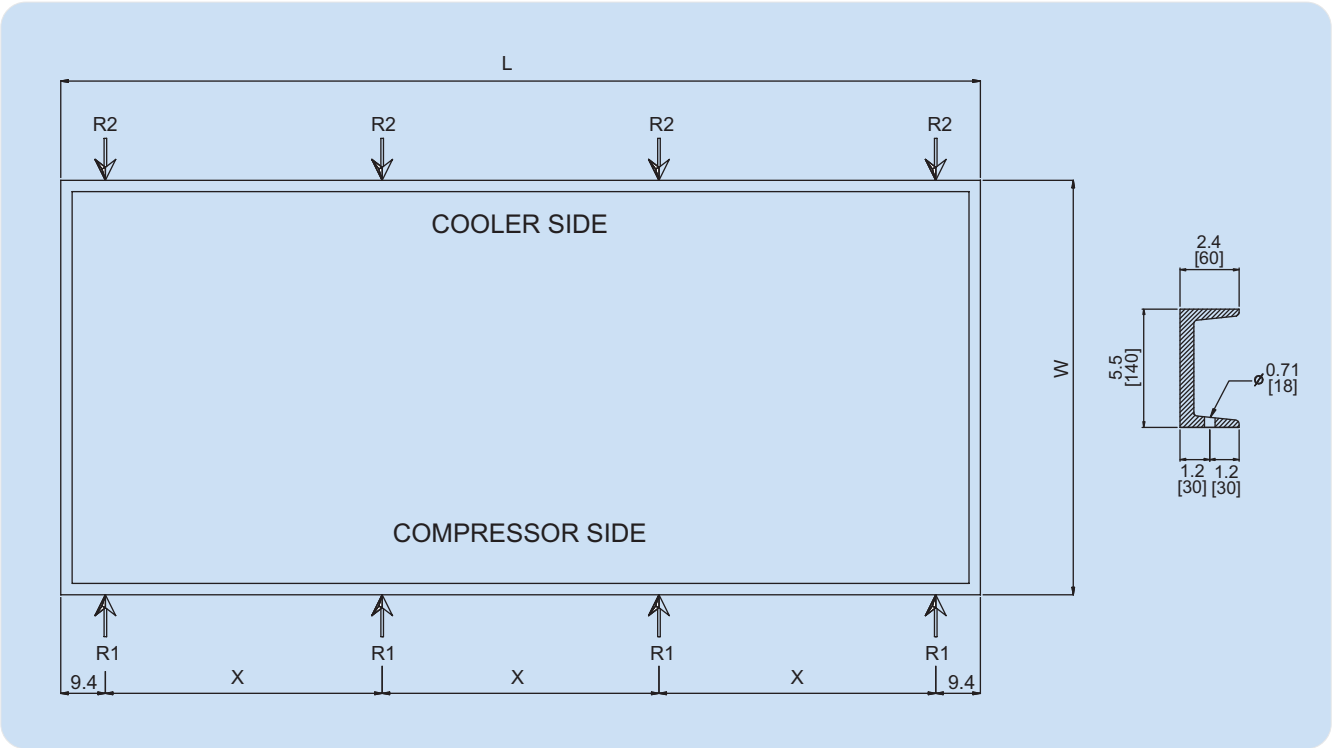

Model	L	W	N	X	N1	N2	R1	R2
110-2	186.6	87.8	3	55.9	4	4	1301	1201
120-2	186.6	87.8	3	55.9	4	4	1205	1112
125-2	186.6	87.8	3	55.9	4	4	1318	1217
135-2	202.4	87.8	3	61.1	4	4	1404	1297
140-2	202.4	87.8	3	61.1	4	4	1485	1370

W: BASE WIDTH [INCH]
L: BASE LENGTH [INCH]
N: NUMBER OF X DISTANCES
X: DISTANCE BETWEEN SUPPORTS [INCH]
N1: NO. OF SUPPORTS ON COMPRESSOR SIDE
N2: NO. OF SUPPORTS ON COOLER SIDE
R1: LOADS ON COMPRESSOR SIDE [Lb]
R2: LOADS ON COOLER SIDE [Lb]

LOAD DISTRIBUTION

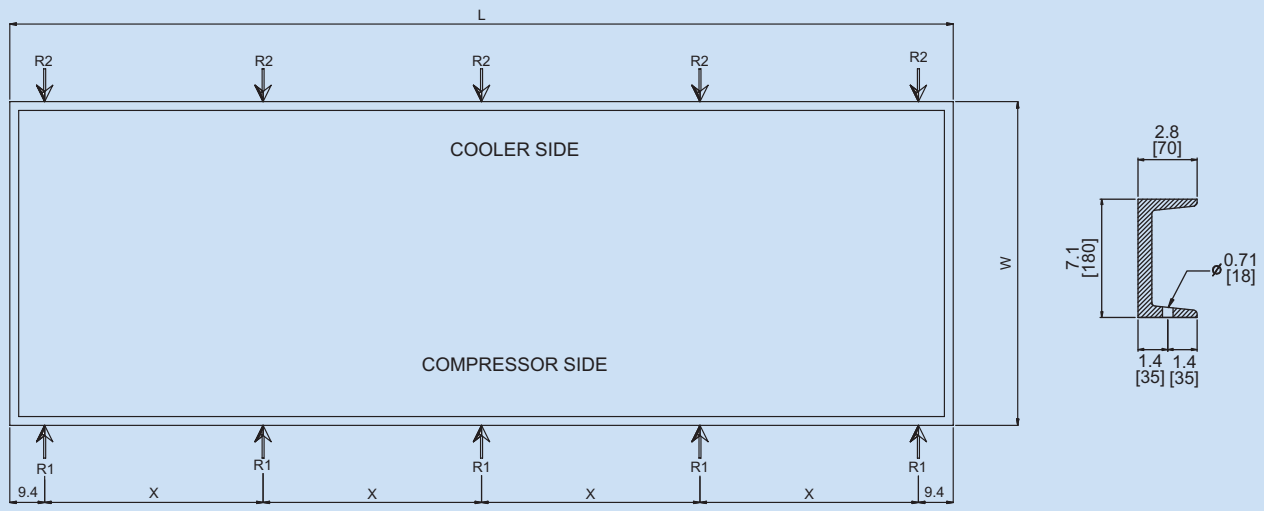

Model	L	W	N	X	N1	N2	R1	R2
145-2	240.9	87.8	4	55.5	5	5	1414	1305
160-2	240.9	87.8	4	55.5	5	5	1436	1326
165-2	240.9	87.8	4	55.5	5	5	1456	1344
175-2	240.9	87.8	4	55.5	5	5	1441	1330
190-2	287.4	87.8	4	67.1	5	5	1611	1487
195-2	240.9	87.8	4	55.5	5	5	1490	1376
200-2	287.4	87.8	4	67.1	5	5	1659	1531
210-2	256.7	87.8	4	59.4	5	5	1493	1379
220-2	295.3	87.8	4	69.1	5	5	1666	1537
235-2	299.2	87.8	4	70.1	5	5	1736	1602
250-2	299.2	87.8	4	70.1	5	5	1808	1668
275-2	299.2	87.8	4	70.1	5	5	1961	1810
285-2	299.2	87.8	4	70.1	5	5	1986	1833

W: BASE WIDTH [INCH]
L: BASE LENGTH [INCH]
N: NUMBER OF X DISTANCES
X: DISTANCE BETWEEN SUPPORTS [INCH]
N1: NO. OF SUPPORTS ON COMPRESSOR SIDE
N2: NO. OF SUPPORTS ON COOLER SIDE
R1: LOADS ON COMPRESSOR SIDE [Lb]
R2: LOADS ON COOLER SIDE [Lb]

LOAD DISTRIBUTION

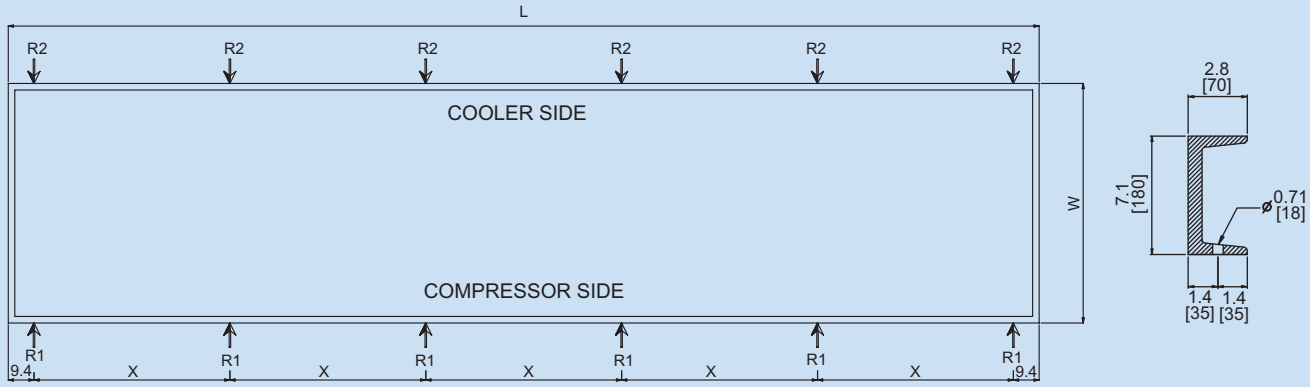

Model	L	W	N	X	N1	N2	R1	R2
300-2	341.7	87.8	5	64.6	6	6	1843	1701
315-2	341.7	87.8	5	64.6	6	6	1857	1715
315-3	349.6	87.8	5	66.1	6	6	1890	1744
335-2	341.7	87.8	5	64.6	6	6	1890	1745

W: BASE WIDTH [INCH]
L: BASE LENGTH [INCH]
N: NUMBER OF X DISTANCES
X: DISTANCE BETWEEN SUPPORTS [INCH]
N1: NO. OF SUPPORTS ON COMPRESSOR SIDE
N2: NO. OF SUPPORTS ON COOLER SIDE
R1: LOADS ON COMPRESSOR SIDE [Lb]
R2: LOADS ON COOLER SIDE [Lb]

LOAD DISTRIBUTION

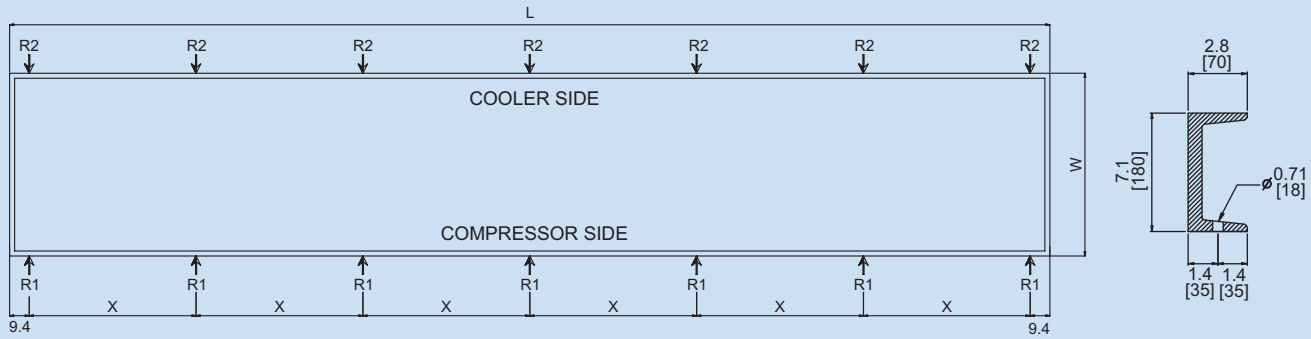

Model	L	W	N	X	N1	N2	R1	R2
350-3	396.1	87.8	6	62.8	7	7	1804	1665
375-3	396.1	87.8	6	62.8	7	7	1864	1720

W: BASE WIDTH [INCH]
L: BASE LENGTH [INCH]
N: NUMBER OF X DISTANCES
X: DISTANCE BETWEEN SUPPORTS [INCH]
N1: NO. OF SUPPORTS ON COMPRESSOR SIDE
N2: NO. OF SUPPORTS ON COOLER SIDE
R1: LOADS ON COMPRESSOR SIDE [Lb]
R2: LOADS ON COOLER SIDE [Lb]

LOAD DISTRIBUTION

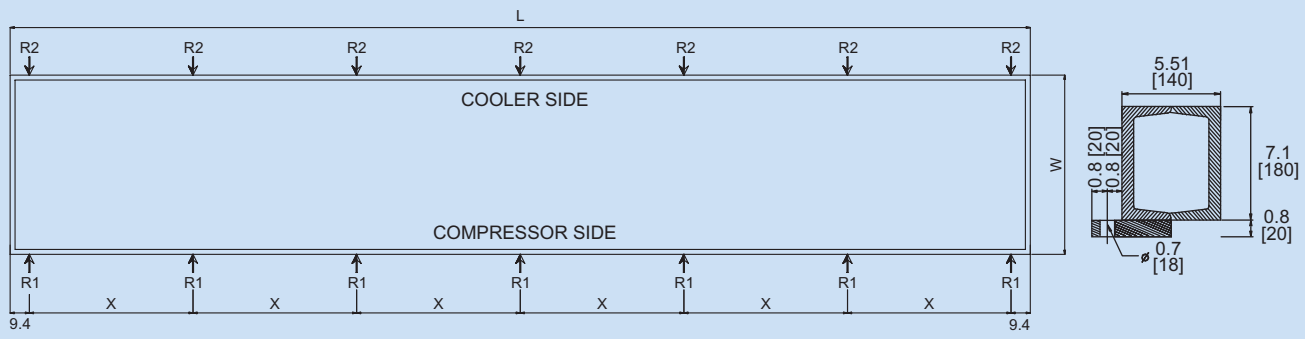

Model	L	W	N	X	N1	N2	R1	R2
400-3	450.4	87.8	6	71.9	7	7	2029	1873
415-3	450.4	87.8	6	71.9	7	7	2072	1912
450-3	450.4	87.8	6	71.9	7	7	2092	1930

W: BASE WIDTH [INCH]
L: BASE LENGTH [INCH]
N: NUMBER OF X DISTANCES
X: DISTANCE BETWEEN SUPPORTS [INCH]
N1: NO. OF SUPPORTS ON COMPRESSOR SIDE
N2: NO. OF SUPPORTS ON COOLER SIDE
R1: LOADS ON COMPRESSOR SIDE [Lb]
R2: LOADS ON COOLER SIDE [Lb]

LOAD DISTRIBUTION

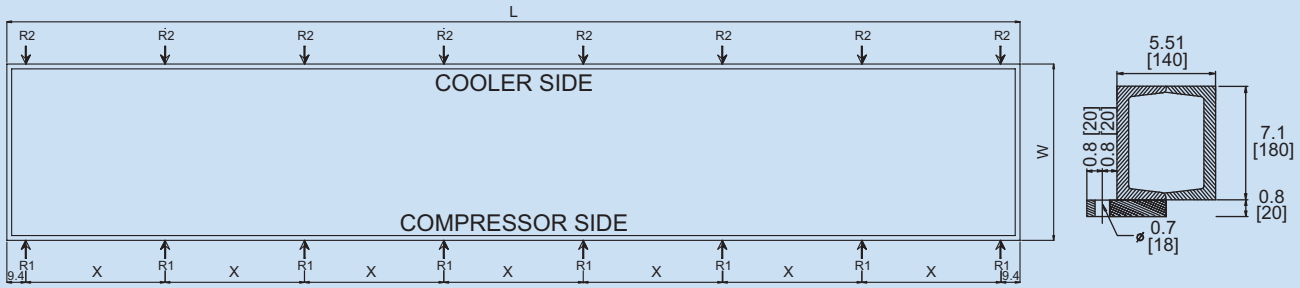

Model	L	W	N	X	N1	N2	R1	R2
465-3	504.7	87.8	7	69.5	8	8	1998	1844
430-3	504.7	87.8	7	69.5	8	8	1978	1826
475-3	504.7	87.8	7	69.5	8	8	2034	1877
500-3	504.7	87.8	7	69.5	8	8	2047	1890

W: BASE WIDTH [INCH]
L: BASE LENGTH [INCH]
N: NUMBER OF X DISTANCES
X: DISTANCE BETWEEN SUPPORTS [INCH]
N1: NO. OF SUPPORTS ON COMPRESSOR SIDE
N2: NO. OF SUPPORTS ON COOLER SIDE
R1: LOADS ON COMPRESSOR SIDE [Lb]
R2: LOADS ON COOLER SIDE [Lb]

LOAD DISTRIBUTION

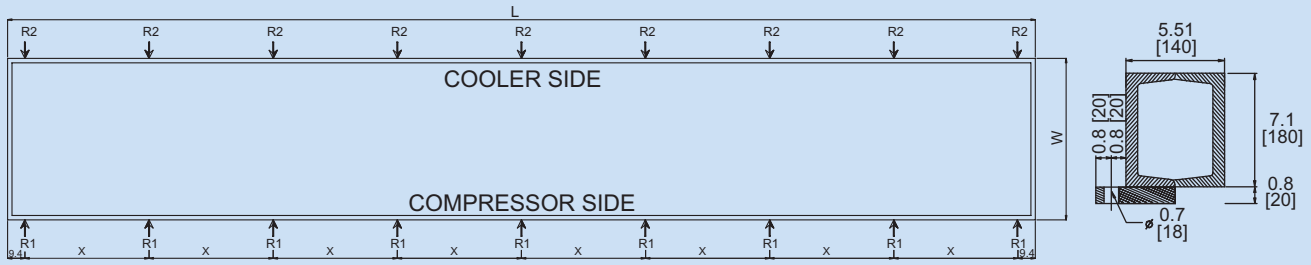

Model	L	W	N	X	N1	N2	R1	R2
510-3	559.1	87.8	8	67.5	9	9	1940	1791
550-4	582.7	87.8	8	70.5	9	9	2182	2014
580-4	582.7	87.8	8	70.5	9	9	2226	2055
600-4	582.7	87.8	8	70.5	9	9	2280	2104

W: BASE WIDTH [INCH]
L: BASE LENGTH [INCH]
N: NUMBER OF X DISTANCES
X: DISTANCE BETWEEN SUPPORTS [INCH]
N1: NO. OF SUPPORTS ON COMPRESSOR SIDE
N2: NO. OF SUPPORTS ON COOLER SIDE
R1: LOADS ON COMPRESSOR SIDE [Lb]
R2: LOADS ON COOLER SIDE [Lb]

COOLER CONNECTIONS

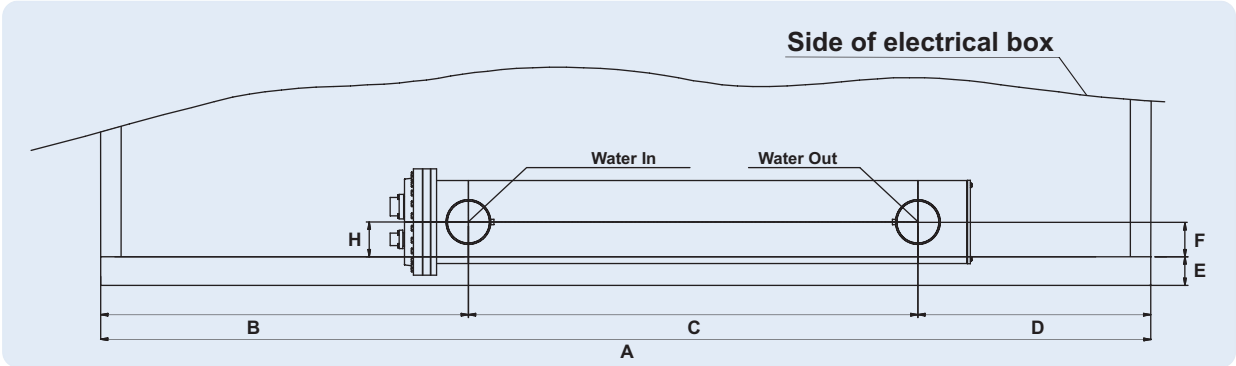

Model	A		B		C		D		E		F		Water in (Dia.)		Water out (Dia.)	
50-1	3295	[129.7]	680	[26.8]	2280	[89.8]	335	[13.2]	100	[3.9]	185	[7.3]	125	[5]	125	[5]
60-1	3160	[124.4]	570	[22.4]	2280	[89.8]	310	[12.2]	140	[5.5]	165	[6.5]	125	[5]	125	[5]
65-1	3160	[124.4]	570	[22.4]	2280	[89.8]	310	[12.2]	140	[5.5]	165	[6.5]	125	[5]	125	[5]
70-1	3160	[124.4]	570	[22.4]	2280	[89.8]	310	[12.2]	140	[5.5]	165	[6.5]	125	[5]	125	[5]
70-2	3360	[132.3]	770	[30.3]	2280	[89.8]	310	[12.2]	140	[5.5]	165	[6.5]	125	[5]	125	[5]
75-1	3160	[124.4]	580	[22.8]	2250	[88.6]	330	[13.0]	140	[5.5]	190	[7.5]	150	[6]	150	[6]
80-1	3160	[124.4]	580	[22.8]	2250	[88.6]	330	[13.0]	140	[5.5]	190	[7.5]	150	[6]	150	[6]
95-1	3160	[124.4]	580	[22.8]	2250	[88.6]	330	[13.0]	140	[5.5]	190	[7.5]	150	[6]	150	[6]
95-2	3360	[132.3]	780	[30.7]	2250	[88.6]	330	[13.0]	140	[5.5]	190	[7.5]	150	[6]	150	[6]
100-1	3160	[124.4]	580	[22.8]	2250	[88.6]	330	[13.0]	140	[5.5]	190	[7.5]	150	[6]	150	[6]
100-2	3360	[132.3]	780	[30.7]	2250	[88.6]	330	[13.0]	140	[5.5]	190	[7.5]	150	[6]	150	[6]
110-2	4740	[186.6]	2110	[83.1]	2250	[88.6]	380	[15.0]	140	[5.5]	190	[7.5]	150	[6]	150	[6]
120-2	4740	[186.6]	2110	[83.1]	2250	[88.6]	380	[15.0]	140	[5.5]	190	[7.5]	150	[6]	150	[6]
125-2	4740	[186.6]	2110	[83.1]	2250	[88.6]	380	[15.0]	140	[5.5]	190	[7.5]	150	[6]	150	[6]
135-2	5140	[202.4]	1800	[70.9]	2200	[86.6]	1140	[44.9]	140	[5.5]	170	[6.7]	200	[8]	200	[8]
140-2	5140	[202.4]	1800	[70.9]	2200	[86.6]	1140	[44.9]	140	[5.5]	170	[6.7]	200	[8]	200	[8]
145-2	6120	[240.9]	1800	[70.9]	2200	[86.6]	2120	[83.5]	180	[7.1]	170	[6.7]	200	[8]	200	[8]
160-2	6120	[240.9]	1800	[70.9]	2200	[86.6]	2120	[83.5]	180	[7.1]	170	[6.7]	200	[8]	200	[8]
165-2	6120	[240.9]	1800	[70.9]	2200	[86.6]	2120	[83.5]	180	[7.1]	170	[6.7]	200	[8]	200	[8]
175-2	6120	[240.9]	1800	[70.9]	2200	[86.6]	2120	[83.5]	180	[7.1]	170	[6.7]	200	[8]	200	[8]
190-2	7300	[287.4]	2980	[117.3]	2200	[86.6]	2120	[83.5]	180	[7.1]	170	[6.7]	200	[8]	200	[8]
195-2	6120	[240.9]	1600	[63.0]	2500	[98.4]	2020	[79.5]	180	[7.1]	170	[6.7]	200	[8]	200	[8]
200-2	7300	[287.4]	2680	[105.5]	2500	[98.4]	2120	[83.5]	180	[7.1]	170	[6.7]	200	[8]	200	[8]
210-2	6520	[256.7]	1750	[68.9]	2900	[114.2]	1870	[73.6]	180	[7.1]	170	[6.7]	150	[6]	150	[6]
220-2	7500	[295.3]	1750	[68.9]	2900	[114.2]	2850	[112.2]	180	[7.1]	170	[6.7]	150	[6]	150	[6]
235-2	7600	[299.2]	1850	[72.8]	2900	[114.2]	2850	[112.2]	180	[7.1]	170	[6.7]	150	[6]	150	[6]
250-2	7600	[299.2]	1850	[72.8]	2900	[114.2]	2850	[112.2]	180	[7.1]	170	[6.7]	150	[6]	150	[6]
275-2	7600	[299.2]	1700	[66.9]	3010	[118.5]	2890	[113.8]	180	[7.1]	250	[9.8]	200	[8]	200	[8]
285-2	7600	[299.2]	1700	[66.9]	3010	[118.5]	2890	[113.8]	180	[7.1]	250	[9.8]	200	[8]	200	[8]
300-2	8680	[341.7]	2535	[99.8]	3410	[134.3]	2735	[107.7]	180	[7.1]	250	[9.8]	200	[8]	200	[8]
315-2	8680	[341.7]	2535	[99.8]	3410	[134.3]	2735	[107.7]	180	[7.1]	250	[9.8]	200	[8]	200	[8]
315-3	8880	[349.6]	2735	[107.7]	3410	[134.3]	2735	[107.7]	180	[7.1]	250	[9.8]	200	[8]	200	[8]
335-2	8680	[341.7]	2435	[95.9]	3610	[142.1]	2635	[103.7]	180	[7.1]	250	[9.8]	200	[8]	200	[8]
350-3	10060	[396.1]	3825	[150.6]	3610	[142.1]	2625	[103.3]	180	[7.1]	250	[9.8]	200	[8]	200	[8]
375-3	10060	[396.1]	3825	[150.6]	3610	[142.1]	2625	[103.3]	180	[7.1]	250	[9.8]	200	[8]	200	[8]
400-3	11440	[450.4]	3125	[123.0]	3610	[142.1]	4705	[185.2]	180	[7.1]	250	[9.8]	200	[8]	200	[8]
415-3	11440	[450.4]	3125	[123.0]	3610	[142.1]	4705	[185.2]	180	[7.1]	250	[9.8]	200	[8]	200	[8]
430-3	12820	[504.7]	3125	[123.0]	3610	[142.1]	6085	[239.6]	180	[7.1]	250	[9.8]	200	[8]	200	[8]
450-3	11440	[450.4]	3125	[123.0]	3610	[142.1]	4705	[185.2]	180	[7.1]	250	[9.8]	200	[8]	200	[8]
465-3	12820	[504.7]	3125	[123.0]	3610	[142.1]	6085	[239.6]	180	[7.1]	250	[9.8]	200	[8]	200	[8]
475-3	12820	[504.7]	3125	[123.0]	3610	[142.1]	6085	[239.6]	180	[7.1]	250	[9.8]	200	[8]	200	[8]
500-3	12820	[504.7]	3125	[123.0]	3610	[142.1]	6085	[239.6]	180	[7.1]	250	[9.8]	200	[8]	200	[8]
510-3	14200	[559.1]	4505	[177.4]	3610	[142.1]	6085	[239.6]	180	[7.1]	250	[9.8]	200	[8]	200	[8]

All dimensions are in mm [inch]

COOLER CONNECTIONS

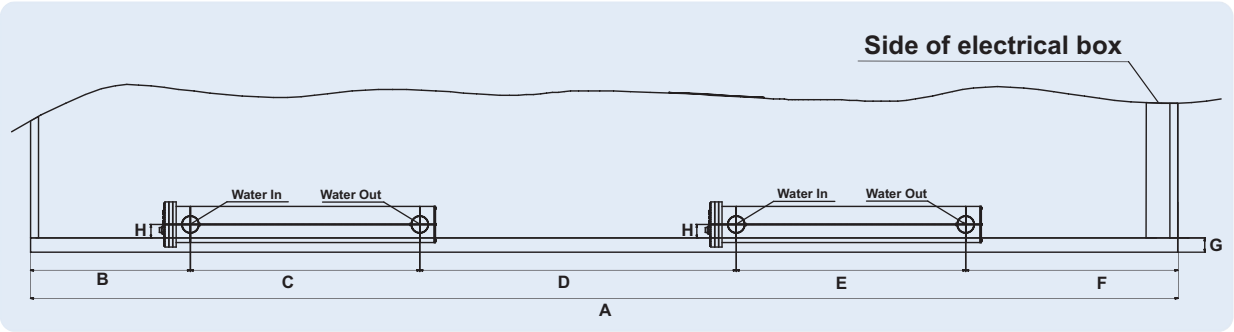

Model	A	B	C	D	E	F	G	H	Water in (Dia.)	Water out (Dia.)
550-4	14200 [559.1]	1955 [76.9]	3010 [118.5]	3890 [153.1]	3010 [118.5]	2935 [115.5]	180 [7]	250 [9.8]	200 [8]	200 [8]
580-4	14800 [604.1]	1955 [76.9]	3010 [118.5]	3890 [153.1]	3010 [118.5]	2935 [115.5]	180 [7]	250 [9.8]	200 [8]	200 [8]
600-4	14800 [604.1]	1655 [65.1]	3610 [142.1]	3290 [129.5]	3610 [142.1]	2635 [103.7]	180 [7]	250 [9.8]	200 [8]	200 [8]

All dimensions are in mm [inch]

PERFORMANCE TABLES [50 Hz]

MODEL	LWT	AMBIENT TEMPERATURE [°F]																			
		85				95				105				115				125			
		T.CAP	WFR	PI	WPD	T.CAP	WFR	PI	WPD	T.CAP	WFR	PI	WPD	T.CAP	WFR	PI	WPD	T.CAP	WFR	PI	WPD
APSa 50-1	40	44.9	108.3	42.9	1.4	41.8	100.9	47.3	1.2	39.7	95.7	50.9	1.0	37.2	89.7	55.0	0.9	33.1	79.8	62.6	0.7
	42	46.5	112.0	43.7	1.5	43.3	104.4	48.2	1.3	41.2	99.2	51.7	1.1	38.6	93.0	55.9	0.9	34.4	82.9	63.6	0.7
	44	48.2	115.8	44.5	1.6	44.9	107.8	49.1	1.4	42.6	102.5	52.7	1.2	40.0	96.1	57.0	1.0	35.8	86.1	64.6	0.8
	45	49.1	117.9	44.8	1.6	45.7	109.8	49.5	1.4	43.5	104.4	53.2	1.2	40.8	97.9	57.4	1.0	36.5	87.7	65.1	0.8
	46	50.0	120.1	45.2	1.7	46.6	111.8	49.9	1.5	44.3	106.3	53.6	1.2	41.5	99.7	57.9	1.0	37.2	89.3	65.6	0.8
	48	51.8	124.2	45.9	1.8	48.2	115.7	50.8	1.6	45.9	110.0	54.5	1.3	43.0	103.1	58.9	1.1	38.5	92.4	66.8	0.9
	50	53.6	128.3	46.7	1.9	49.9	119.5	51.8	1.7	47.4	113.6	55.6	1.4	44.6	106.7	60.0	1.2	39.9	95.6	67.9	1.0
APSa 60-1	40	47.7	115.1	41.7	1.6	44.7	107.8	45.4	1.4	42.7	103.1	47.2	1.2	40.4	97.6	49.5	1.0	36.5	88.0	56.2	0.8
	42	49.5	119.3	42.3	1.7	46.4	111.8	46.0	1.5	44.5	107.0	47.9	1.3	42.0	101.2	50.2	1.1	38.0	91.6	57.0	0.9
	44	51.5	123.8	42.8	1.8	48.2	115.8	46.7	1.6	46.2	111.0	48.5	1.4	43.7	105.0	51.0	1.2	39.6	95.1	57.7	1.0
	45	52.5	126.1	43.0	1.8	49.1	118.0	47.0	1.6	47.1	113.1	48.9	1.4	44.5	106.8	51.4	1.2	40.4	96.9	58.1	1.0
	46	53.5	128.3	43.3	1.9	50.1	120.2	47.3	1.7	48.0	115.2	49.2	1.5	45.4	108.9	51.7	1.2	41.2	98.8	58.5	1.0
	48	55.5	133.0	43.9	2.0	52.0	124.6	48.0	1.8	49.8	119.4	49.9	1.6	47.2	113.1	52.4	1.3	42.8	102.5	59.3	1.1
	50	57.5	137.7	44.5	2.2	53.9	129.1	48.7	1.9	51.6	123.6	50.7	1.7	49.0	117.2	53.2	1.4	44.5	106.5	60.1	1.2
APSa 65-1	40	52.8	127.4	48.1	1.9	49.4	119.1	52.6	1.7	47.2	113.9	54.7	1.4	44.4	107.2	57.6	1.2	40.0	96.4	65.6	1.0
	42	54.9	132.2	48.8	2.0	51.3	123.5	53.3	1.8	49.0	118.1	55.6	1.5	46.2	111.3	58.4	1.3	41.6	100.2	66.5	1.1
	44	56.9	136.9	49.5	2.2	53.3	128.1	54.1	1.9	50.9	122.3	56.4	1.6	48.0	115.5	59.3	1.4	43.3	104.2	67.4	1.1
	45	58.0	139.4	49.8	2.2	54.2	130.3	54.5	2.0	51.8	124.5	56.9	1.7	49.0	117.6	59.8	1.4	44.2	106.1	67.9	1.2
	46	59.1	141.8	50.1	2.3	55.3	132.7	54.9	2.0	52.8	126.8	57.3	1.8	49.8	119.6	60.3	1.5	45.1	108.2	68.3	1.2
	48	61.1	146.6	51.0	2.5	57.3	137.4	55.7	2.2	54.8	131.3	58.2	1.9	51.8	124.1	61.2	1.6	46.9	112.4	69.2	1.3
	50	63.4	151.8	51.7	2.6	59.4	142.3	56.6	2.3	56.8	136.0	59.1	2.0	53.7	128.5	62.1	1.7	48.7	116.6	70.2	1.4
APSa 70-1	40	57.1	137.8	48.7	2.2	53.4	129.0	53.0	1.9	51.1	123.2	56.4	1.7	48.2	116.2	60.9	1.4	43.6	105.2	69.0	1.2
	42	59.4	142.9	49.4	2.4	55.6	133.9	53.8	2.1	53.2	128.1	57.2	1.8	50.2	120.8	61.7	1.5	45.4	109.4	70.0	1.2
	44	61.6	148.2	50.0	2.5	57.7	138.7	54.6	2.2	55.2	132.8	58.1	1.9	52.2	125.5	62.6	1.6	47.2	113.5	71.0	1.3
	45	62.8	150.8	50.4	2.6	58.8	141.3	55.0	2.3	56.3	135.2	58.6	2.0	53.2	127.8	63.0	1.7	48.1	115.6	71.5	1.4
	46	64.0	153.5	50.7	2.7	59.9	143.8	55.4	2.4	57.3	137.5	59.0	2.1	54.3	130.2	63.5	1.7	49.0	117.7	72.1	1.4
	48	66.3	158.9	51.4	2.9	62.1	149.0	56.1	2.5	59.5	142.7	59.8	2.2	56.4	135.2	64.3	1.9	51.0	122.2	73.1	1.5
	50	68.8	164.8	52.1	3.1	64.6	154.6	56.9	2.7	61.8	147.9	60.6	2.4	58.5	140.1	65.3	2.0	53.0	126.9	74.1	1.7
APSa 70-2	40	58.0	140.0	52.6	2.3	54.3	131.1	57.3	2.0	51.9	125.3	61.0	1.7	49.0	118.1	65.9	1.5	44.1	106.4	75.0	1.2
	42	60.5	145.6	53.4	2.4	56.5	136.2	58.2	2.1	54.1	130.2	62.0	1.9	51.0	122.9	66.8	1.6	46.0	110.8	76.0	1.3
	44	62.8	150.9	54.0	2.6	58.8	141.3	59.0	2.3	56.1	134.9	62.9	2.0	53.1	127.6	67.8	1.7	47.9	115.1	77.1	1.4
	45	64.0	153.7	54.4	2.7	59.9	144.0	59.4	2.4	57.2	137.4	63.4	2.1	54.1	130.1	68.2	1.7	48.8	117.3	77.6	1.4
	46	65.2	156.6	54.7	2.8	61.0	146.5	59.7	2.5	58.3	140.0	63.8	2.1	55.2	132.5	68.7	1.8	49.8	119.6	78.1	1.5
	48	67.7	162.2	55.4	3.0	63.4	151.9	60.6	2.6	60.6	145.2	64.7	2.3	57.3	137.3	69.7	1.9	51.8	124.3	79.2	1.6
	50	70.1	167.9	56.2	3.2	65.6	157.2	61.5	2.8	62.8	150.5	65.7	2.4	59.4	142.2	70.8	2.1	53.8	128.8	80.3	1.7
APSa 75-1	40	64.7	156.1	59.1	1.9	60.5	146.0	64.5	1.6	57.8	139.4	67.3	1.4	54.4	131.4	70.7	1.2	49.1	118.4	80.3	1.0
	42	67.2	161.8	59.9	2.0	62.8	151.3	65.5	1.8	60.0	144.5	68.3	1.5	56.6	136.4	71.8	1.3	51.1	123.2	81.4	1.0
	44	69.7	167.6	60.7	2.1	65.2	156.8	66.5	1.9	62.4	150.0	69.3	1.6	58.9	141.7	72.8	1.4	53.2	127.8	82.5	1.1
	45	71.0	170.6	61.1	2.2	66.4	159.6	67.0	1.9	63.6	152.8	69.8	1.7	60.0	144.2	73.3	1.4	55.6	130.2	84.0	1.5
	46	72.3	173.7	61.6	2.3	67.6	162.3	67.5	2.0	64.8	155.5	70.2	1.7	61.2	146.9	73.9	1.5	55.2	132.6	83.8	1.2
	48	75.0	179.8	62.4	2.4	70.2	168.2	68.5	2.1	67.2	161.2	71.4	1.9	63.4	152.1	75.0	1.6	57.3	137.4	85.1	1.3
	50	77.8	186.2	63.3	2.6	72.7	174.2	69.6	2.3	69.7	166.9	72.5	2.0	65.8	157.7	76.2	1.7	59.5	142.4	86.4	1.4
APSa 80-1	40	71.3	172.0	67.1	2.3	66.7	160.9	73.3	2.0	63.5	153.3	76.7	1.7	59.7	144.1	80.8	1.4	53.5	129.1	91.9	1.2
	42	74.0	178.3	68.0	2.4	69.1	166.4	74.7	2.1	66.0	158.9	77.9	1.8	62.0	149.3	82.1	1.5	55.7	134.1	93.3	1.2
	44	76.8	184.7	69.0	2.6	71.7	172.3	75.9	2.3	68.5	164.7	79.1	1.9	64.4	154.8	83.4	1.6	57.9	139.2	94.7	1.3
	45	78.3	188.0	69.5	2.7	73.0	175.4	76.5	2.3	69.8	167.6	79.7	2.0	65.6	157.6	84.0	1.7	59.1	162.4	95.3	1.4
	46	79.7	191.3	70.0	2.8	74.3	178.4	77.0	2.4	71.0	170.4	80.4	2.1	66.9	160.5	84.7	1.7	60.3	144.7	96.0	1.4
	48	82.6	197.9	71.1	2.9	77.1	184.9	78.2	2.6	73.5	176.1	82.0	2.2	69.3	166.2	86.0	1.9	62.6	150.2	97.3	1.5
	50	85.5	204.7	72.2	3.1	79.9	191.2	79.5	2.7	76.2	182.5	83.3	2.4	72.0	172.3	87.4	2.0	65.0	155.7	98.8	1.6
APSa 95-2	40	77.9	188.0	73.9	2.2	72.6	175.1	81.4	1.9	69.2	166.9	87.0	1.6	64.9	156.5	94.2	1.3	58.0	139.8	107.2	1.1
	42	80.8	194.5	75.2	2.3	75.4	181.5	82.7	2.0	71.8	173.0	88.4	1.7	67.4	162.2	95.7	1.4	60.3	145.3	109.0	1.2
	44	83.8	201.4	76.3	2.5	78.2	188.1	84.0	2.1	74.4	178.9	90.1	1.8	70.0	168.2	97.2	1.5	62.7	150.6	110.6	1.2
	45	85.3	205.0	76.9	2.5	79.7	191.4	84.6	2.2	75.7	182.0	90.9	1.9	71.3	171.2	98.0	1.6	63.9	153.5	111.5	1.3
	46	86.9	208.6	77.5	2.6	81.1	194.7	85.3	2.3	77.2	185.3	91.6	2.0	72.7	174.4	98.8	1.6	65.1	156.2	112.3	1.3
	48	89.9	215.6	78.8	2.8	83.9	201.2	86.9	2.4	80.0	191.8	93.1	2.1	75.3	180.6	100.4	1.8	67.6	162.1	114.1	1.4
	50	93.3	223.3	80.0	3.0	87.1	208.5	88.2	2.6	82.7	198.1	94.9	2.2	77.9	186.5	102.4	1.9	70.2	168.0	115.8	1.5
APSa 95-1	40	78.2	188.7	75.5	2.2	73.0	176.2	82.8	1.9	69.4	167.5	86.8	1.6	65.1	157.0	91.6	1.4	58.5	141.0	103.8	1.1
	42	81.2	195.6	76.6	2.3	75.7	182.2	84.4	2.0	72.1	173.6	88.2	1.7	67.6	162.8	93.1	1.4	60.8	146.3	105.5	1.2
	44	84.2	202.5	77.7	2.5	78.5	188.7	85.7	2.2	74.7	179.5	89.9	1.8	70.2	168.8	94.6	1.5	63.1	151.8	107.1	1.3
	45	85.7	205.9	78.4	2.6	80.0	192.1	86.4	2.2	76.0	182.6	90.7	1.9	71.5	171.8	95.3	1.6	64.3	154.6	107.9	1.3
	46	87.2	209.3	79.1	2.6	81.4	195.4	87.1	2.3	77.5	185.9	91.4	2.0	72.9	175.0	96.1	1.7	65.6	157.5	108.8	1.4
	48	90.2	216.3	80.5	2.8	84.2	201.9	88.7	2.5	80.3	192.6	92.9	2.1	75.6	181.3	97.6	1.8	68.0	163.1	110.6	1.4
	50	93.6	224.1	81.7	3.0	87.4	209.2	90.1	2.6	83.3	199.5	94.3	2.3	78.5	187.9	99.1	1.9	70.4	168.5	112.7	1.5
APSa 100-1	40	87.9	212.1	83.5	2.7	81.8	197.4	92.0	2.4	77.6	187.3	98.8	2.0	72.6	175.2	106.8	1.7	64.6	155.9	121.9	1.3
	42	91.1	219.3	85.0	2.9	84.7	204.0	93.8	2.5	80.4	193.7	100.7	2.1	75.3	181.3	109.0	1.8	67.2	161.8	123.8	1.4
	44	94.3	226.7	86.5	3.1	87.7	210.9	95.7	2.7	83.5	200.7	102.5	2.3	78.2	187.9	110.8	1.9	69.9	168.0	125.7	1.5
	45	95.9	230.4	87.3	3.2	89.2	214.4	96.6	2.8	85.0	204.3	103.3	2.4	79.7	191.3	111.7	2.0	71.2	171.1	126.7	1.6
	46	97.7	234.6	87.9	3.3	90.9	218.2	97.3	2.9	86.6	207.8	104.1	2.5	81.1	194.7	112.6	2.0	72.5	174.0	127.8	1.6
	48	101.3	242.9	89.2	3.5	94.3	226.0	98.8	3.1	89.5	214.6	106.2	2.6	83.9	201.0	114.9	2.2	75.1	179.9	130.2	1.7
	50	104.8	251.0	90.9	3.7	97.5	233.4	100.7	3.3	92.6	221.6	108.3	2.8	86.7	207.6	117.1	2.3	78.0	186.7	132.2	1.9
APSa 100-2	40	88.4	213.3	85.2	2.8	82.3	198.6	93.9	2.4	78.0	188.2	101.0	2.0	73.1	176.3	109.1	1.7	65.1	157.1	124.5	1.4
	42	91.6	220.6	86.7	2.9	85.3	205.4	95.6	2.6	81.0	195.1	102.6	2.2	76.0	182.9	110.9	1.8	67.7	163.0	126.4	1.4
	44	94.9	228.1	88.3	3.1	88.3	212.4	97.5	2.7	84.0	201.8	104.6	2.3	78.7	189.2	113.0	1.9	70.4	169.2	128.3	1.6
	45	96.5	231.8	89.0	3.2	89.9	215.9	98.3	2.8	85.4	205.2	105.5	2.4	80.1	192.4	114.0	2.0	71.7	172.3	129.3	1.6
	46	98.3	236.0	89.7	3.3	91.5	219.8	99.1	2.9	87.1	209.0	106.4	2.5	81.7	196.1	115.0	2.1	73.2	175.6	130.3	1.7
	48	101.9	244.4	91.0	3.6	94.9	227.6	100.6	3.1	90.3	216.4	108.0	2.6	84.7	203.0	116.8	2.2	75.9	181.9	132.4	1.8
	50	105.5	252.5	92.7	3.8	98.2	235.1	102.6	3.3	93.3	223.5	110.2	2.8	87.5	209.6	119.1	2.3	78.5	187.9	134.9	1.9
APSa 110-2	40	92.8	223.9	84.1	3.0	86.7	209.2	91.8	2.7	82.9	200.1	95.6	2.3	78.0	188.3	100.6	1.9	70.4	170.0	114.1	1.6
	42	96.4	232.1	85.2	3.2	90.1	217.1	93.1	2.8	86.1	207.4	96.9	2.5	81.2	195.7	102.0	2.1	73.3	176.6	115.6	1.7
	44	100.0	240.4	86.4	3.5	93.6	225.0	94.4	3.0	89.5	215.1	98.5	2.6	84.4	202.9	103.4	2.2	76.2	183.3	117.4	1.8
	45	101.9	244.8	87.0	3.6	95.4	229.1	95.2	3.2	91.1	218.8	99.2	2.7	86.1	206.7	104.3	2.3	77.7	186.7	118.3	1.9
	46	103.8	249.2	87.6	3.7	97.0	233.0	95.8	3.3	92.8	222.8	100.0	2.8	87.7	210.5	105.1	2.4	79.2	190.1	119.2	1.9
	48	107.6	258.1	88.7	4.0	100.7	241.5	97.3	3.5	96.2	230.7	101.5	3.0	91.0	218.1	106.6	2.5	82.4	197.6	120.8	2.1
	50	111.6	267.2	90.0	4.2	104.4	250.0	98.7	3.7	99.9	239.1	103.1	3.2	94.6	226.5	108.1	2.7	85.6	204.9	122.4	2.2

LEGEND
- LWT : Leaving Water Temperature [°F]
- T.CAP : Capacity [T.R]
- PI : Power Input (Compressor only) [kW]
- GPM : Water flow rate
- WPD : Water Pressure Drop [Psi]

NOTE

All cooling capacities are based on 10°F water temperature difference between inlet and outlet water temperature.

PERFORMANCE TABLES [50 Hz]

MODEL	LWT	AMBIENT TEMPERATURE [°F]																			
		85				95				105				115				125			
		T.CAP	WFR	PI	WPD	T.CAP	WFR	PI	WPD	T.CAP	WFR	PI	WPD	T.CAP	WFR	PI	WPD	T.CAP	WFR	PI	WPD
APSa 120-2	40	97.5	235.1	90.7	3.3	91.1	219.8	99.1	2.9	87.0	209.8	103.4	2.5	81.8	197.4	108.8	2.1	73.7	177.7	123.7	1.7
	42	101.3	243.9	92.0	3.6	94.6	227.7	100.6	3.1	90.3	217.4	105.0	2.7	85.2	205.2	110.3	2.3	76.5	184.3	125.6	1.8
	44	105.1	252.6	93.2	3.8	98.2	236.1	102.2	3.3	93.7	225.2	106.7	2.9	88.6	212.9	111.8	2.4	79.7	191.7	127.3	2.0
	45	107.1	257.2	93.9	3.9	100.0	240.2	102.9	3.5	95.4	229.3	107.5	3.0	90.3	216.8	112.7	2.5	81.4	195.5	128.2	2.1
	46	109.0	261.7	94.5	4.1	101.8	244.5	103.7	3.6	97.3	233.5	108.4	3.1	92.0	220.8	113.6	2.6	82.9	199.0	129.0	2.1
	48	113.1	271.2	95.9	4.4	105.7	253.4	105.3	3.8	100.9	241.8	110.1	3.3	95.4	228.7	115.3	2.8	86.1	206.5	131.0	2.3
	50	117.2	280.7	97.2	4.7	109.6	262.4	106.9	4.1	104.6	250.5	111.8	3.5	99.0	237.1	117.2	3.0	89.3	213.9	133.0	2.4
APSa 125-2	40	102.0	246.1	97.1	3.6	95.1	229.5	106.3	3.2	90.7	218.9	111.1	2.7	85.4	205.9	117.0	2.3	76.7	185.0	133.2	1.9
	42	106.0	255.3	98.8	3.9	99.1	238.7	108.1	3.4	94.4	227.3	112.9	2.9	88.8	213.9	119.0	2.5	79.8	192.1	135.3	2.0
	44	109.9	264.2	100.3	4.2	102.8	247.2	109.7	3.7	98.1	235.8	114.7	3.1	92.2	221.7	120.8	2.6	83.1	199.7	137.2	2.1
	45	112.0	269.1	101.0	4.3	104.8	251.7	110.5	3.8	99.8	239.8	115.6	3.2	94.0	225.8	121.8	2.7	84.8	203.7	138.1	2.2
	46	114.0	273.7	101.7	4.4	106.7	256.0	111.3	3.9	101.7	244.2	116.5	3.4	95.8	229.9	122.8	2.8	86.5	207.6	139.0	2.3
	48	118.3	283.6	103.1	4.8	110.4	264.5	113.4	4.2	105.5	252.8	118.3	3.6	99.4	238.2	124.7	3.0	89.8	215.3	141.0	2.5
	50	122.5	293.4	104.6	5.1	114.5	274.0	115.2	4.4	109.4	262.0	120.2	3.8	103.0	246.6	126.6	3.2	93.2	223.0	143.2	2.6
APSa 135-2	40	112.9	272.4	102.4	2.9	105.2	253.8	112.6	2.5	100.2	241.8	120.4	2.2	94.2	227.2	130.1	1.8	84.2	203.2	148.1	1.5
	42	117.0	281.7	104.2	3.1	109.2	263.0	114.4	2.7	103.9	250.1	122.6	2.3	97.8	235.5	132.2	2.0	87.6	211.0	150.4	1.6
	44	121.4	291.8	105.8	3.3	113.4	272.6	116.1	2.9	107.8	259.2	124.6	2.5	101.5	244.1	134.3	2.1	91.0	218.8	152.7	1.7
	45	123.6	297.0	106.5	3.4	115.5	277.4	117.0	3.0	109.8	263.8	125.6	2.6	103.4	248.5	135.3	2.2	92.8	222.9	153.9	1.8
	46	125.8	302.0	107.3	3.5	117.5	282.1	117.9	3.1	111.9	268.6	126.6	2.7	105.4	253.1	136.4	2.2	94.5	226.9	155.1	1.8
	48	130.2	312.1	109.1	3.8	121.6	291.5	120.1	3.3	116.0	278.1	128.5	2.8	109.3	261.9	138.6	2.4	98.2	235.4	157.5	1.9
	50	135.1	323.4	110.7	4.0	126.1	302.0	122.0	3.5	120.4	288.2	130.6	3.0	113.0	270.5	141.3	2.5	101.8	243.8	159.8	2.1
APSa 140-2	40	121.6	293.5	115.5	3.4	113.1	272.9	127.1	2.9	107.8	260.0	135.9	2.5	101.0	243.6	147.2	2.1	90.2	217.6	167.8	1.7
	42	126.1	303.7	117.4	3.6	117.5	283.1	129.2	3.1	111.6	268.7	138.6	2.7	104.8	252.5	149.6	2.2	93.8	225.8	170.4	1.8
	44	130.7	314.2	119.3	3.8	121.8	292.9	131.3	3.3	115.9	278.6	140.9	2.9	109.0	262.0	152.0	2.4	97.4	234.2	173.0	1.9
	45	133.2	319.9	120.1	3.9	123.9	297.7	132.5	3.4	118.0	283.5	142.0	3.0	111.0	266.6	153.1	2.5	99.3	238.6	174.3	2.0
	46	135.6	325.5	121.0	4.1	126.2	302.8	133.6	3.6	120.2	288.5	143.1	3.0	112.9	271.1	154.6	2.6	101.3	243.1	175.7	2.1
	48	140.3	336.4	123.0	4.3	130.8	313.6	135.7	3.8	124.7	299.0	145.3	3.3	116.9	280.2	157.4	2.7	105.1	251.9	178.3	2.2
	50	145.2	347.6	125.2	4.6	135.4	324.2	138.1	4.0	129.0	308.9	148.0	3.5	121.3	290.3	159.9	2.9	109.1	261.2	181.0	2.4
APSa 145-2	40	125.3	302.3	116.7	3.6	117.2	282.7	127.4	3.1	111.8	269.7	132.7	2.7	105.4	254.2	139.5	2.3	94.9	228.8	158.7	1.9
	42	130.1	313.3	118.3	3.8	121.6	292.9	129.3	3.3	116.2	279.8	134.9	2.9	109.4	263.5	141.8	2.4	98.7	237.7	160.8	2.0
	44	135.1	324.7	120.0	4.1	126.2	303.4	131.3	3.6	120.6	289.9	136.9	3.1	113.8	273.7	143.8	2.6	102.8	247.2	163.0	2.1
	45	137.5	330.4	120.8	4.2	128.5	308.8	132.3	3.7	122.9	295.3	137.8	3.2	116.1	278.9	144.8	2.7	104.8	251.7	164.0	2.2
	46	140.1	336.2	121.6	4.3	131.0	314.4	133.3	3.8	125.3	300.9	138.8	3.3	118.3	284.0	145.7	2.8	106.8	256.4	165.3	2.3
	48	145.3	348.2	123.3	4.6	135.7	325.4	135.2	4.1	130.0	311.7	140.7	3.5	122.8	294.4	148.0	3.0	110.9	265.8	167.9	2.5
	50	150.6	360.6	125.0	4.9	140.8	337.1	137.3	4.3	134.9	322.9	142.9	3.8	127.3	304.7	150.2	3.2	115.1	275.5	170.5	2.6
APSa 160-2	40	132.5	319.7	124.6	3.6	123.8	298.7	136.3	3.1	118.0	284.7	142.2	2.7	111.2	268.2	149.7	2.3	99.9	241.1	170.4	1.8
	42	137.7	331.6	126.4	3.8	128.6	309.7	138.4	3.4	122.7	295.5	144.5	2.9	115.5	278.1	152.1	2.4	103.9	250.2	172.9	2.0
	44	142.7	343.0	128.4	4.1	133.5	320.9	140.5	3.6	127.3	306.1	146.7	3.1	120.0	288.4	154.5	2.6	107.9	259.5	175.6	2.1
	45	145.3	348.9	129.4	4.2	136.0	326.6	141.5	3.7	129.8	311.7	147.9	3.2	122.2	293.5	155.7	2.7	110.1	264.4	176.8	2.2
	46	148.0	355.3	130.3	4.3	138.5	332.6	142.6	3.8	132.2	317.3	149.1	3.3	124.4	298.7	156.9	2.8	112.3	269.6	178.0	2.3
	48	153.4	367.8	132.1	4.6	143.6	344.2	144.8	4.1	137.1	328.7	151.4	3.5	129.2	309.7	159.4	3.0	116.8	280.0	180.3	2.4
	50	159.2	381.1	134.0	4.9	148.5	355.6	147.4	4.3	142.1	340.2	153.7	3.7	134.0	320.8	161.9	3.2	121.3	290.5	183.0	2.6
APSa 165-2	40	138.1	333.2	132.5	3.9	129.1	311.6	144.8	3.4	123.0	296.8	151.3	2.9	115.6	278.8	159.4	2.4	103.9	250.6	181.5	2.0
	42	143.7	346.0	134.5	4.1	134.4	323.6	147.1	3.6	128.1	308.5	153.8	3.1	120.4	290.0	162.1	2.6	108.1	260.2	184.4	2.1
	44	149.3	358.9	136.5	4.4	139.1	334.5	149.9	3.9	132.9	319.5	156.2	3.3	125.0	300.5	164.7	2.8	112.4	270.2	187.3	2.3
	45	151.9	364.9	137.4	4.6	141.7	340.5	151.0	4.0	135.4	325.3	157.5	3.5	127.4	306.1	166.0	2.9	114.5	275.0	188.7	2.4
	46	154.7	371.5	138.4	4.7	144.4	346.7	152.2	4.1	138.0	331.3	158.7	3.6	129.7	311.4	167.2	3.0	116.8	280.4	189.9	2.4
	48	160.5	384.7	140.3	5.0	149.7	358.8	154.5	4.4	142.9	342.6	161.4	3.8	134.7	323.0	169.9	3.2	121.6	291.5	192.5	2.6
	50	166.1	397.8	142.6	5.4	155.3	371.7	156.8	4.7	147.9	354.1	164.4	4.0	139.6	334.3	172.5	3.4	126.2	302.2	195.2	2.8
APSa 175-2	40	145.6	351.4	139.7	4.3	135.9	327.8	153.2	3.7	129.1	311.4	164.2	3.2	121.1	292.2	177.9	2.7	108.9	262.7	202.3	2.2
	42	152.0	366.1	142.2	4.6	142.0	341.8	155.9	4.1	134.9	324.9	167.2	3.5	126.5	304.5	181.1	2.9	113.7	273.8	205.4	2.4
	44	157.7	379.0	144.2	4.9	147.2	353.9	158.3	4.3	140.1	336.8	169.9	3.7	131.4	315.9	184.0	3.1	118.2	284.1	208.6	2.5
	45	160.7	386.0	145.3	5.1	149.9	360.0	159.8	4.5	142.8	342.9	171.2	3.8	133.8	321.5	185.4	3.2	120.4	289.2	210.1	2.6
	46	163.8	393.1	146.4	5.3	152.4	365.7	161.3	4.6	145.3	348.7	172.5	3.9	136.4	327.5	186.9	3.3	122.8	294.8	211.8	2.7
	48	169.6	406.5	148.6	5.6	158.2	379.2	163.8	4.9	150.3	360.3	175.9	4.2	141.5	339.1	189.8	3.5	127.4	305.5	215.0	2.9
	50	175.4	420.0	151.2	6.0	163.7	392.0	166.5	5.2	155.9	373.3	178.7	4.5	146.9	351.8	192.8	3.8	132.4	317.0	218.3	3.1
APSa 190-2	40	149.8	361.5	141.7	4.5	139.7	337.1	154.6	4.0	133.6	322.3	160.8	3.4	125.9	303.8	169.3	2.9	113.5	273.7	192.5	2.4
	42	156.6	377.2	143.8	4.9	146.4	352.5	157.1	4.3	139.9	336.8	163.5	3.7	131.7	317.1	172.1	3.1	118.5	285.4	195.9	2.5
	44	162.7	391.1	145.8	5.2	151.9	365.2	159.1	4.6	145.2	349.2	165.9	4.0	137.0	329.4	174.6	3.3	123.3	296.5	198.6	2.7
	45	165.5	397.7	146.7	5.4	154.8	372.0	160.4	4.7	148.0	355.5	167.2	4.1	139.5	335.2	175.7	3.5	125.9	302.4	200.0	2.8
	46	168.7	405.0	147.7	5.6	157.8	378.8	161.6	4.9	150.6	361.5	168.4	4.2	142.2	341.4	177.1	3.6	128.4	308.2	201.3	2.9
	48	174.9	419.3	149.7	6.0	163.5	392.0	163.9	5.2	156.4	374.9	171.1	4.5	147.5	353.6	179.9	3.8	133.4	319.9	204.0	3.1
	50	181.0	433.4	152.1	6.3	169.5	406.0	166.4	5.6	162.0	387.9	173.7	4.8	153.1	366.6	182.7	4.1	138.8	332.4	206.7	3.4
APSa 195-2	40	160.5	387.2	152.6	4.1	149.3	360.2	167.8	3.6	142.2	343.1	179.6	3.1	133.4	321.8	194.8	2.6	119.8	289.0	221.2	2.1
	42	167.2	402.6	155.2	4.4	155.8	375.1	170.9	3.9	148.4	357.4	182.8	3.3	138.9	334.6	198.1	2.7	124.8	300.5	224.8	2.2
	44	173.2	416.4	157.8	4.7	161.6	388.5	173.5	4.1	153.9	369.9	186.0	3.5	144.5	347.3	201.3	2.9	129.8	312.1	228.4	2.4
	45	176.5	424.0	159.0	4.9	164.7	395.6	174.9	4.3	156.5	375.9	187.8	3.6	147.0	353.2	202.8	3.0	132.2	317.5	230.0	2.5
	46	179.8	431.6	160.1	5.0	167.7	402.6	176.2	4.4	159.3	382.4	189.4	3.8	149.8	359.7	204.4	3.1	134.6	323.0	232.4	2.6
	48	186.2	446.3	162.8	5.4	173.7	416.3	179.4	4.7	165.4	396.4	192.4	4.0	155.6	373.0	207.7	3.4	139.4	334.1	236.4	2.7
	50	192.6	461.3	165.7	5.7	179.7	430.2	182.8	5.0	171.1	409.7	195.9	4.3	161.0	385.5	211.6	3.6	144.7	346.4	240.0	2.9
APSa 200-2	40	164.2	396.1	155.5	4.3	153.4	370.1	170.1	3.8	146.2	352.8	177.5	3.2	137.7	332.1	187.0	2.7	123.9	298.9	212.9	2.2
	42	171.3	412.4	158.0	4.6	159.9	385.1	173.0	4.1	152.5	367.4	180.7	3.5	143.5	345.5	190.2	2.9	129.3	311.3	216.1	2.4
	44	177.8	427.5	160.2	5.0	166.0	399.0	175.6	4.3	158.3	380.5	183.5	3.7	149.3	358.9	192.9	3.1	134.7	323.9	219.1	2.6
	45	181.1	435.0	161.3	5.1	169.1	406.1	176.9	4.5	161.3	387.6	185.0	3.9	152.3	365.9	194.2	3.3	137.3	329.7	220.5	2.7
	46	184.5	442.8	162.4	5.3	172.3	413.6	178.3	4.6	164.3	394.4	186.4	4.0	155.2	372.6	195.5	3.4	139.9	335.8	222.2	2.8
	48	191.4	458.8	164.7	5.7	178.6	428.2	180.9	5.0	170.5	408.7	189.3	4.3	161.2	386.4	198.6	3.6	145.2	348.1	225.6	2.9
	50	198.2	474.6	167.3	6.0	185.4	443.8	183.7	5.3	176.7	423.1	192.3	4.6	167.1	400.1	201.6	3.9	150.8	361.1	229.1	3.2
APSa 210-2	40	182.9	441.3	170.4	5.4	170.1	410.5	188.1	4.7	161.4	389.4	201.9	4.0	150.9	364.2	218.2	3.3	134.5	324.5	247.7	2.6
	42	189.5	456.3	173.5	5.7	176.2	424.3	191.8	5.0	167.6	403.7	205.3	4.3	156.8	377.7	221.9	3.5	140.0	337.1	251.6	2.8
	44	196.5	472.5	176.3	6.1	182.8	439.4	195.0	5.3	173.9	418.0	208.8	4.5	162.7	391.2	225.7	3.8	145.3	349.3	255.9	3.0
	45	200.2	480.8	177.6	6.3	186.2	447.3	196.6	5.5	176.9	424.9	210.9	4.7	165.5	397.6	227.9	3.9	147.8	355.0	258.4	3.1
	46	203.8	489.1	179.0	6.5	189.5	454.9	198.2	5.7	179.9	431.7	212.9	4.8	168.3	404.1	230.2	4.0	150.5	361.2	260.6	3.2
	48	210.8	505.4	182.3	6.9	196.0	469.9	202.0	6.0	186.0	445.9	217.2	5.1	174.1	417.4	234.6	4.3	156.3	374.8	264.6	3.5
	50	218.0	522.0	185.6	7.4	202.7	485.3	206.0	6.4	192.3	460.4	221.5	5.4	180.8	432.8	238.4	4.6	161.8	387.4	269.4	3.7

LEGEND
- LWT : Leaving Water Temperature [°F]
- T.CAP : Capacity [T.R]
- PI : Power Input (Compressor only) [kW]
- GPM : Water flow rate
- WPD : Water Pressure Drop [Psi]

NOTE

All cooling capacities are based on 10°F water temperature difference between inlet and outlet water temperature.

PERFORMANCE TABLES [50 Hz]

MODEL	LWT	AMBIENT TEMPERATURE [°F]																			
		85				95				105				115				125			
		T.CAP	WFR	PI	WPD	T.CAP	WFR	PI	WPD	T.CAP	WFR	PI	WPD	T.CAP	WFR	PI	WPD	T.CAP	WFR	PI	WPD
APSa 220-2	40	189.6	457.4	170.5	5.8	176.8	426.4	187.4	5.0	168.7	407.0	195.4	4.3	158.5	382.3	205.9	3.6	141.9	342.4	234.1	2.9
	42	196.5	473.2	173.4	6.1	183.6	442.0	190.4	5.4	175.2	422.0	198.5	4.6	164.5	396.3	209.2	3.9	147.9	356.0	237.3	3.2
	44	203.8	490.0	176.1	6.6	190.5	458.0	193.3	5.8	181.5	436.4	202.3	4.9	170.9	410.9	212.6	4.1	153.9	370.0	240.5	3.4
	45	207.6	498.7	177.3	6.8	194.0	466.1	194.8	5.9	184.7	443.6	204.1	5.1	174.1	418.2	214.2	4.3	156.9	377.0	242.3	3.5
	46	211.3	507.3	178.6	7.0	197.5	474.1	196.3	6.1	188.2	451.7	205.8	5.3	177.4	425.8	216.0	4.4	160.0	384.0	244.2	3.6
	48	218.7	524.3	181.7	7.4	204.4	489.9	200.0	6.5	195.1	467.8	209.0	5.6	184.0	441.1	219.3	4.7	166.0	397.9	247.9	3.9
	50	226.8	543.2	184.4	8.0	212.0	507.6	203.1	7.0	202.4	484.7	212.3	6.0	191.0	457.2	222.8	5.1	172.4	412.7	251.8	4.2
APSa 235-2	40	204.6	493.7	192.1	6.7	190.8	460.4	211.2	5.8	181.7	438.3	220.7	5.0	170.0	410.2	233.1	4.2	152.4	367.7	264.1	3.4
	42	212.5	511.8	195.0	7.2	198.2	477.4	214.5	6.2	188.8	454.6	224.3	5.4	176.6	425.3	236.8	4.4	158.4	381.4	268.2	3.6
	44	220.3	529.7	198.1	7.6	205.5	494.0	218.2	6.7	195.7	470.5	228.3	5.7	183.5	441.3	240.6	4.8	164.7	396.1	272.4	3.9
	45	224.1	538.4	199.8	7.9	209.0	502.1	220.2	6.9	199.0	478.1	230.5	5.9	186.9	449.0	242.4	4.9	167.8	403.1	274.5	4.0
	46	228.0	547.4	201.6	8.1	212.8	510.8	222.1	7.1	202.6	486.4	232.5	6.1	190.5	457.2	244.4	5.1	171.1	410.6	276.6	4.1
	48	236.0	565.8	205.0	8.6	220.7	529.1	225.5	7.6	210.2	503.9	236.1	6.5	197.6	473.8	248.2	5.4	177.6	425.8	280.8	4.4
	50	244.7	586.0	208.0	9.2	228.3	546.7	229.6	8.1	217.5	520.7	240.6	6.9	204.4	489.5	252.9	5.8	183.7	439.9	286.2	4.7
APSa 250-2	40	228.4	551.1	203.6	7.6	212.6	512.9	224.4	6.7	197.7	477.0	240.6	5.7	181.3	437.4	260.2	4.7	161.8	390.4	295.2	3.8
	42	236.6	569.7	207.2	8.1	220.6	531.2	228.2	7.1	205.2	494.1	244.7	6.1	187.8	452.3	265.2	5.0	167.7	403.9	301.0	4.0
	44	245.3	589.8	210.6	8.7	228.8	550.1	231.8	7.6	212.9	511.8	248.7	6.5	194.9	468.6	269.8	5.3	174.2	418.9	305.9	4.3
	45	249.9	600.4	212.2	9.0	232.9	559.4	234.1	7.8	216.6	520.4	251.2	6.7	198.6	477.1	271.9	5.5	177.6	426.6	308.2	4.5
	46	254.4	610.7	213.7	9.3	236.8	568.3	236.3	8.1	220.2	528.7	253.7	6.9	202.2	485.4	274.1	5.7	180.9	434.3	310.5	4.6
	48	263.2	631.1	217.6	9.8	244.9	587.1	240.8	8.6	227.8	546.0	258.7	7.3	209.1	501.3	279.5	6.1	188.0	450.7	315.3	4.9
	50	272.3	651.9	221.6	10.5	253.2	606.4	245.5	9.1	235.5	563.9	263.8	7.8	217.1	519.9	284.0	6.5	194.7	466.2	320.9	5.3
APSa 275-2	40	242.5	584.9	218.4	6.1	225.4	543.8	241.3	5.3	209.3	505.0	259.1	4.5	191.7	462.5	280.2	3.7	170.2	410.6	319.3	3.0
	42	251.1	604.7	222.4	6.5	233.4	562.1	246.0	5.6	216.7	521.9	264.3	4.8	198.5	477.9	285.8	4.0	177.0	426.1	324.1	3.2
	44	260.0	625.0	226.5	6.9	241.6	580.8	250.8	6.0	224.3	539.3	269.6	5.1	205.4	493.9	291.6	4.2	184.0	442.4	329.2	3.4
	45	264.6	635.6	228.6	7.1	245.8	590.6	253.3	6.2	228.6	549.1	271.8	5.3	209.4	503.1	293.9	4.4	187.5	450.3	331.7	3.5
	46	269.1	645.9	230.7	7.3	250.0	600.1	255.7	6.4	232.9	559.1	274.0	5.5	213.5	512.4	296.2	4.5	190.8	457.9	335.1	3.6
	48	278.4	667.3	235.0	7.8	258.6	619.9	260.7	6.8	241.3	578.4	278.7	5.8	221.1	530.1	301.4	4.8	197.7	473.9	340.9	3.9
	50	287.9	689.3	239.3	8.3	267.4	640.2	265.8	7.2	249.4	597.2	284.3	6.2	228.6	547.3	307.4	5.1	205.2	491.4	346.0	4.2
APSa 285-2	40	250.8	605.0	232.7	6.5	232.8	561.5	257.6	5.7	216.0	521.2	276.4	4.8	197.4	476.3	299.2	4.0	175.4	423.1	339.8	3.2
	42	259.7	625.4	237.0	6.9	241.2	580.9	262.2	6.0	224.3	540.3	280.9	5.1	205.1	494.0	303.9	4.2	182.3	439.0	345.0	3.4
	44	268.8	646.3	241.4	7.4	250.4	601.9	266.4	6.4	232.3	558.4	286.4	5.5	212.3	510.5	310.0	4.5	188.7	453.7	351.9	3.6
	45	273.5	656.9	243.6	7.6	254.8	612.2	268.8	6.6	236.3	567.6	289.3	5.6	216.1	519.0	313.1	4.6	192.5	462.3	354.6	3.7
	46	278.2	667.8	245.9	7.8	259.2	622.2	271.4	6.8	240.3	576.9	292.1	5.8	219.7	527.4	316.2	4.8	196.3	471.2	357.4	3.9
	48	287.7	689.7	250.4	8.3	268.1	642.6	276.7	7.3	248.5	595.7	298.0	6.1	228.0	546.5	321.4	5.1	203.5	487.8	363.3	4.1
	50	297.5	712.4	255.1	8.8	277.2	663.7	282.1	7.7	256.9	615.1	303.9	6.5	236.2	565.6	326.6	5.4	210.3	503.6	370.3	4.4
APSa 300-2	40	262.1	632.3	223.5	6.3	244.0	588.6	246.5	5.5	227.4	548.7	263.8	4.7	208.6	503.3	285.6	3.9	186.7	450.4	324.0	3.2
	42	271.5	653.7	227.5	6.7	253.1	609.5	250.5	5.9	236.0	568.3	268.3	5.0	216.7	521.8	290.5	4.2	194.3	467.9	329.1	3.4
	44	281.2	675.9	231.5	7.2	262.1	630.2	255.3	6.2	244.4	587.5	273.5	5.4	224.9	540.8	295.1	4.5	201.8	485.2	334.2	3.6
	45	286.5	688.2	233.2	7.4	267.1	641.6	257.3	6.5	249.0	598.2	275.7	5.5	229.3	550.9	297.5	4.6	205.8	494.4	336.8	3.8
	46	291.8	700.4	235.0	7.6	272.1	653.1	259.3	6.7	253.7	609.1	277.9	5.7	233.7	561.0	299.8	4.8	209.8	503.5	339.4	3.9
	48	302.3	724.6	238.8	8.1	281.8	675.5	263.8	7.1	262.7	629.8	282.9	6.1	242.0	580.0	305.3	5.1	217.3	520.8	345.7	4.1
	50	312.6	748.5	243.1	8.6	291.4	697.7	268.9	7.5	271.7	650.4	288.5	6.5	250.6	600.0	310.7	5.4	225.1	539.0	351.6	4.4
APSa 315-3	40	276.6	667.4	248.5	7.0	257.5	621.2	274.0	6.1	239.5	577.7	293.9	5.2	219.7	530.2	317.6	4.3	195.5	471.7	362.0	3.5
	42	286.5	689.9	253.0	7.5	266.6	642.0	279.3	6.5	247.9	597.1	299.8	5.5	227.5	547.9	324.1	4.6	203.3	489.5	367.5	3.7
	44	297.4	715.0	256.9	8.0	276.8	665.4	283.9	6.9	257.5	619.1	304.7	5.9	236.5	568.6	329.3	4.9	211.5	508.4	373.3	4.0
	45	302.8	727.5	258.8	8.2	281.8	677.1	286.1	7.2	262.2	629.9	307.1	6.1	240.8	578.5	331.8	5.1	215.4	517.5	376.1	4.1
	46	308.2	739.9	261.0	8.5	286.8	688.6	288.6	7.4	266.9	640.6	310.0	6.3	245.1	588.4	335.0	5.3	219.3	526.3	379.9	4.2
	48	318.9	764.5	265.7	9.0	296.7	711.3	294.2	7.8	276.0	661.6	316.1	6.7	253.7	608.2	341.2	5.6	227.1	544.3	386.6	4.5
	50	329.9	789.8	270.6	9.6	306.8	734.7	300.0	8.3	285.5	683.7	322.2	7.1	263.3	630.4	346.5	6.0	235.7	564.4	392.4	4.8
APSa 315-2	40	277.7	670.0	245.2	7.1	258.5	623.7	270.4	6.2	240.4	580.1	290.0	5.3	220.6	532.3	313.5	4.4	196.3	473.6	357.3	3.5
	42	287.6	692.7	249.7	7.5	267.7	644.6	275.7	6.5	248.9	599.5	295.9	5.6	228.4	550.1	319.8	4.6	204.1	491.5	362.8	3.7
	44	298.6	717.8	253.6	8.0	277.9	668.1	280.2	7.0	258.5	621.6	300.8	6.0	237.4	570.8	325.0	5.0	212.3	510.4	368.5	4.0
	45	304.1	730.4	255.4	8.3	283.0	679.8	282.4	7.2	263.3	632.5	303.1	6.2	241.8	580.9	327.5	5.1	216.3	519.6	371.2	4.1
	46	309.5	742.9	257.5	8.6	288.0	691.4	284.9	7.4	268.0	643.2	305.9	6.4	246.1	590.7	330.6	5.3	220.1	528.4	374.9	4.3
	48	320.2	767.5	262.2	9.1	297.9	714.1	290.4	7.9	277.1	664.3	312.0	6.8	254.7	610.6	336.7	5.6	228.0	546.5	381.5	4.6
	50	331.2	793.0	267.1	9.7	308.1	737.7	296.0	8.4	286.7	686.4	318.0	7.2	264.3	632.9	342.0	6.0	236.7	566.7	387.3	4.9
APSa 335-2	40	302.9	730.8	270.7	6.9	281.4	679.0	299.5	6.0	261.1	630.0	321.8	5.1	238.9	576.4	348.2	4.2	212.5	512.7	395.3	3.4
	42	313.7	755.4	275.7	7.3	291.4	701.8	305.4	6.4	270.4	651.1	328.3	5.4	247.4	595.8	355.3	4.5	220.2	530.4	402.9	3.6
	44	324.8	780.7	280.9	7.8	301.6	725.1	311.4	6.8	279.8	672.7	335.0	5.7	256.0	615.6	362.5	4.7	229.1	550.8	409.2	3.8
	45	330.5	793.9	283.5	8.0	306.9	737.2	314.5	7.0	284.7	684.0	338.4	5.9	261.0	627.1	365.4	4.9	233.4	560.8	412.4	4.0
	46	336.1	806.9	286.1	8.3	312.1	749.1	317.5	7.2	289.5	694.9	341.7	6.1	266.1	638.7	368.3	5.1	237.5	570.2	416.5	4.1
	48	347.8	833.7	291.5	8.8	322.9	774.0	323.8	7.6	300.4	720.1	347.4	6.5	275.6	660.8	374.7	5.4	246.2	590.2	423.8	4.4
	50	359.7	861.3	297.0	9.3	333.9	799.4	330.2	8.1	311.2	745.2	353.3	6.9	285.0	682.3	382.1	5.7	255.5	611.9	430.1	4.7
APSa 350-3	40	313.7	756.9	269.4	7.4	292.4	705.5	296.6	6.4	272.4	657.3	317.6	5.5	249.7	602.5	344.2	4.6	223.6	539.4	390.2	3.7
	42	324.9	782.5	274.2	7.8	302.8	729.1	302.3	6.8	282.1	679.3	324.0	5.9	259.4	624.7	349.7	4.9	232.4	559.6	396.2	4.0
	44	337.3	810.9	278.4	8.4	314.3	755.7	307.2	7.3	292.9	704.3	329.3	6.3	269.6	648.1	355.4	5.2	241.7	581.1	402.5	4.2
	45	343.5	825.1	280.4	8.7	320.1	769.0	309.6	7.6	298.3	716.7	331.9	6.5	274.5	659.5	358.1	5.4	246.3	591.6	405.5	4.4
	46	349.6	839.2	282.8	8.9	325.8	782.1	312.4	7.8	303.6	728.8	335.0	6.7	279.4	670.6	361.6	5.6	250.6	601.5	409.6	4.5
	48	361.8	867.2	288.0	9.5	337.0	808.0	318.4	8.3	314.0	752.8	341.7	7.1	289.3	693.5	368.3	5.9	259.5	622.2	416.9	4.8
	50	374.1	895.8	293.2	10.1	348.5	834.4	324.6	8.8	324.9	777.9	348.1	7.5	300.2	718.7	374.1	6.3	269.4	645.1	423.3	5.2
APSa 375-3	40	329.2	794.3	290.6	8.1	306.4	739.2	320.7	7.0	284.9	687.5	344.0	6.0	260.9	629.4	372.8	5.0	232.9	561.9	422.9	4.0
	42	340.9	821.0	295.9	8.6	317.2	763.9	326.9	7.5	295.0	710.4	350.9	6.4	270.9	652.5	378.7	5.3	242.1	582.9	429.4	4.3
	44	353.1	848.8	301.4	9.2	328.6	790.0	333.1	8.0	305.5	734.6	357.6	6.8	281.5	676.7	384.7	5.7	251.7	605.0	436.0	4.6
	45	359.2	863.0	304.1	9.4	334.8	804.3	335.7	8.2	311.4	748.0	360.5	7.0	286.6	688.5	388.2	5.9	256.2	615.5	440.0	4.7
	46	365.4	877.1	306.9	9.7	341.0	818.7	338.3	8.5	317.2	761.4	363.4	7.3	291.5	699.8	392.1	6.1	260.6	625.6	444.4	4.9
	48	378.1	906.5	312.5	10.3	353.2	846.6	344.5	9.1	328.5	787.4	370.1	7.7	301.5	722.7	400.0	6.4	270.5	648.4	451.7	5.2
	50	392.2	939.0	317.2	11.0	365.1	874.3	351.1	9.6	339.5	813.0	377.5	8.2	312.4	748.1	406.9	6.9	280.6	671.8	458.9	5.6
APSa 400-3	40	351.7	848.6	303.2	9.2	327.9	791.0	333.6	8.0	305.2	736.3	357.6	6.9	280.7	677.1	385.9	5.7	250.2	603.7	439.4	4.6
	42	364.9	878.7	308.0	9.8	340.1	819.0	339.3	8.6	316.3	761.8	364.3	7.3	291.0	700.7	393.2	6.1	260.4	627.0	446.4	4.9
	44	378.5	910.1	312.6	10.5	352.9	848.3	344.6	9.1	328.0	788.5	370.8	7.8	301.8	725.7	400.2	6.5	270.6	650.6	453.3	5.3
	45	385.3	925.6	315.4	10.8	359.1	862.8	347.9	9.4	334.3	803.0	373.8	8.1	307.6	739.0	403.4	6.7	275.9	662.7	456.8	5.5
	46	391.8	940.4	318.1	11.1	365.1	876.4	351.2	9.7	340.2	816.7	376.6	8.3	313.2	751.8	406.4	7.0	281.0	674.6	460.3	5.6
	48	405.4	971.7	323.9	11.8	377.7	905.4	357.9	10.3	351.9	843.7	384.0	8.8	323.9	776.5	414.6	7.4	292.1	700.1	467.5	6.0
	50	419.3	1004.0	329.8	12.6	390.6	935.2	364.8	11.0	365.0	874.0	390.3	9.4	336.1	804.8	421.3	7.9	302.5	724.4	475.6	6.4

LEGEND
- LWT : Leaving Water Temperature [°F]
- T.CAP : Capacity [T.R]
- PI : Power Input (Compressor only) [kW]
- GPM : Water flow rate
- WPD : Water Pressure Drop [Psi]

NOTE

All cooling capacities are based on 10°F water temperature difference between inlet and outlet water temperature.

PERFORMANCE TABLES [50 Hz]

MODEL	LWT	AMBIENT TEMPERATURE [°F]																			
		85				95				105				115				125			
		T.CAP	WFR	PI	WPD	T.CAP	WFR	PI	WPD	T.CAP	WFR	PI	WPD	T.CAP	WFR	PI	WPD	T.CAP	WFR	PI	WPD
APSa 415-3	40	377.8	911.5	342.4	10.5	351.3	847.5	378.1	9.2	326.3	787.2	405.9	7.8	298.9	721.2	439.1	6.5	266.3	642.5	498.6	5.2
	42	392.2	944.4	347.9	11.3	364.7	878.1	384.5	9.8	338.8	815.9	412.9	8.3	310.6	748.0	446.4	6.9	277.1	667.4	506.6	5.6
	44	406.7	977.8	353.2	12.0	378.2	909.2	390.7	10.4	351.5	845.0	419.7	8.9	322.3	774.9	453.9	7.4	287.6	691.5	515.1	5.9
	45	414.0	994.6	356.5	12.4	384.9	924.7	394.6	10.8	357.6	859.1	423.9	9.2	327.9	787.6	458.5	7.6	292.6	702.9	520.2	6.1
	46	421.0	1010.6	359.7	12.8	391.4	939.5	398.3	11.1	363.7	873.0	428.1	9.5	333.6	800.8	462.6	7.9	297.9	715.1	524.6	6.3
	48	435.5	1044.1	366.3	13.6	404.8	970.4	406.0	11.8	376.1	901.5	436.5	10.0	346.5	830.6	470.0	8.4	309.6	742.1	532.7	6.8
	50	450.5	1078.6	373.0	14.4	418.6	1002.3	413.9	12.5	390.4	934.7	443.6	10.7	358.7	858.8	478.4	8.9	320.5	767.5	542.3	7.2
APSa 430-3	40	386.1	931.5	332.7	11.0	359.0	866.2	366.9	9.6	334.6	807.4	392.6	8.2	307.7	742.3	424.3	6.8	275.1	663.7	482.6	5.5
	42	400.3	963.9	338.3	11.7	373.0	898.1	372.7	10.2	347.7	837.3	398.9	8.8	318.8	767.8	432.3	7.3	285.9	688.5	490.0	5.9
	44	414.5	996.5	344.4	12.5	386.4	928.9	379.4	10.9	360.2	866.0	406.4	9.3	331.3	796.5	439.3	7.8	297.2	714.5	497.6	6.3
	45	421.8	1013.1	347.3	12.9	393.1	944.4	382.9	11.2	366.5	880.5	410.2	9.6	337.4	810.6	442.6	8.0	302.9	727.6	501.4	6.5
	46	429.7	1031.5	349.9	13.3	400.6	961.5	385.9	11.6	373.5	896.5	413.5	10.0	343.9	825.6	446.2	8.3	308.8	741.4	505.4	6.8
	48	445.4	1067.7	354.9	14.2	415.2	995.4	391.8	12.4	387.2	928.1	420.0	10.6	356.7	855.1	453.3	8.9	320.4	768.1	513.4	7.2
	50	460.8	1103.2	361.3	15.1	429.4	1028.2	399.3	13.1	400.3	958.5	428.3	11.3	368.7	882.8	462.3	9.4	331.3	793.2	523.3	7.7
APSa 450-3	40	396.0	955.4	364.4	12.5	367.7	887.2	403.0	10.8	341.1	823.0	433.1	9.2	311.7	752.1	469.3	7.6	277.2	668.8	533.0	6.0
	42	410.2	987.9	371.2	13.3	380.9	917.3	411.0	11.5	353.3	850.8	442.0	9.8	323.0	777.9	478.4	8.1	287.2	691.5	543.4	6.4
	44	424.7	1021.0	378.0	14.1	394.3	948.0	419.0	12.3	365.7	879.1	450.9	10.4	335.4	806.4	486.6	8.6	298.7	718.0	552.3	6.9
	45	432.0	1037.8	381.5	14.6	401.0	963.4	423.0	12.6	372.0	893.7	455.1	10.7	341.8	821.1	490.4	8.9	304.4	731.2	556.4	7.1
	46	439.6	1055.3	385.0	15.0	408.1	979.6	427.3	13.0	379.1	910.1	458.8	11.1	348.0	835.4	494.4	9.2	309.9	743.9	561.2	7.4
	48	454.9	1090.4	392.2	16.0	422.1	1011.8	435.6	13.8	393.1	942.4	465.9	11.8	359.8	862.5	504.2	9.8	320.8	768.9	571.7	7.8
	50	470.3	1126.1	399.5	17.0	436.3	1044.8	444.1	14.7	406.5	973.2	475.2	12.6	372.0	890.6	514.2	10.4	333.3	798.0	580.5	8.4
APSa 465-3	40	403.5	973.5	355.2	13.0	375.7	906.5	391.3	11.3	349.7	843.7	419.3	9.6	320.5	773.2	454.5	8.0	286.5	691.3	515.6	6.4
	42	418.1	1006.9	361.5	13.8	389.3	937.5	398.7	12.0	362.3	872.6	427.4	10.3	332.9	801.7	461.7	8.6	297.9	717.3	523.5	6.9
	44	434.1	1043.6	366.9	14.8	404.3	971.9	405.0	12.9	376.4	904.8	434.3	11.0	345.9	831.6	469.1	9.2	309.7	744.5	531.7	7.4
	45	442.0	1061.7	369.6	15.2	411.5	988.6	408.2	13.3	383.2	920.4	437.9	11.3	352.1	845.9	473.0	9.5	315.3	757.4	536.3	7.6
	46	449.8	1079.6	373.0	15.7	418.7	1005.2	412.1	13.7	389.9	935.9	442.3	11.7	358.3	860.2	477.8	9.8	320.8	770.0	541.6	7.9
	48	465.4	1115.7	379.8	16.7	433.2	1038.5	420.1	14.5	403.2	966.6	451.1	12.4	371.2	890.0	486.1	10.4	332.8	797.7	550.7	8.4
	50	481.3	1152.3	386.7	17.7	447.9	1072.4	428.2	15.4	417.4	999.4	459.1	13.2	385.0	921.8	493.6	11.1	345.1	826.3	559.0	9.0
APSa 475-3	40	419.8	1012.7	376.1	11.2	390.5	942.1	414.8	9.8	363.0	875.8	445.1	8.3	331.9	800.7	483.1	6.9	296.1	714.4	548.5	5.5
	42	434.7	1046.9	382.9	11.9	404.3	973.6	422.9	10.4	375.8	904.9	453.9	8.8	344.6	829.9	491.0	7.3	307.5	740.5	557.4	5.9
	44	450.0	1081.9	389.8	12.6	418.5	1006.0	431.1	11.0	388.9	935.1	463.1	9.4	356.6	857.4	500.7	7.8	318.5	765.7	568.1	6.3
	45	458.0	1100.2	393.4	13.0	425.9	1023.0	435.3	11.3	396.2	951.9	466.8	9.7	363.6	873.4	504.8	8.1	324.8	780.3	572.5	6.5
	46	465.8	1118.1	397.0	13.4	433.0	1039.5	439.5	11.7	403.8	969.3	470.6	10.0	370.6	889.7	508.8	8.3	331.1	794.9	576.9	6.7
	48	481.9	1155.2	404.2	14.3	449.1	1076.7	446.6	12.5	418.3	1002.7	478.6	10.7	383.9	920.2	517.5	8.9	343.2	822.6	587.0	7.2
	50	498.4	1193.4	411.7	15.1	465.2	1113.8	453.9	13.3	432.4	1035.3	488.1	11.3	397.2	951.0	526.9	9.4	355.3	850.7	597.2	7.6
APSa 500-3	40	433.5	1045.8	398.5	11.9	402.7	971.6	440.4	10.3	373.8	901.8	473.1	8.8	342.2	825.6	512.1	7.3	304.7	735.0	581.9	5.8
	42	450.2	1084.0	404.5	12.7	418.2	1007.2	447.4	11.1	388.1	934.7	480.7	9.4	355.4	855.9	520.1	7.8	316.6	762.4	590.6	6.2
	44	466.3	1121.1	411.6	13.5	433.2	1041.4	455.8	11.8	402.1	966.6	490.1	10.0	368.0	884.8	530.4	8.3	327.8	788.0	602.4	6.6
	45	474.4	1139.6	415.4	13.9	440.6	1058.5	460.2	12.1	409.0	982.4	494.9	10.3	374.4	899.4	535.7	8.5	334.2	802.7	607.1	6.9
	46	482.7	1158.6	419.2	14.4	448.3	1076.0	464.6	12.5	416.0	998.6	499.9	10.6	380.8	914.0	541.0	8.8	340.8	818.0	611.8	7.1
	48	499.4	1197.3	427.0	15.3	463.7	1111.7	473.7	13.2	430.3	1031.6	509.9	11.3	395.1	947.1	550.1	9.4	353.3	846.9	621.8	7.6
	50	516.5	1236.7	434.8	16.2	479.5	1148.0	482.9	14.1	445.6	1067.0	518.6	12.0	409.5	980.4	558.8	10.0	365.6	875.3	633.2	8.0
APSa 510-3	40	441.4	1064.9	389.1	12.3	410.9	991.5	428.3	10.8	382.4	922.6	459.0	9.2	351.4	847.9	495.8	7.7	313.2	755.6	565.4	6.2
	42	458.3	1103.6	395.1	13.2	426.8	1027.9	435.3	11.5	396.2	954.1	468.1	9.8	363.9	876.2	505.7	8.2	325.5	783.8	574.0	6.6
	44	475.2	1142.4	401.2	14.0	442.6	1063.9	442.4	12.2	411.3	988.8	476.0	10.4	378.0	908.8	514.1	8.7	338.6	814.1	583.0	7.1
	45	483.5	1161.5	404.8	14.5	450.2	1081.6	446.7	12.6	418.9	1006.3	479.7	10.8	385.0	924.9	518.0	9.0	344.9	828.4	587.3	7.3
	46	491.9	1180.7	408.4	14.9	458.0	1099.4	451.0	13.0	426.3	1023.4	483.8	11.1	391.9	940.7	522.7	9.3	351.5	843.8	591.7	7.5
	48	508.8	1219.8	415.7	15.8	473.7	1135.5	459.6	13.8	441.1	1057.4	493.1	11.8	405.5	972.2	532.6	9.9	365.1	875.2	600.8	8.1
	50	526.2	1259.9	423.2	16.8	489.7	1172.6	468.3	14.6	457.6	1095.7	501.0	12.6	421.0	1007.9	541.1	10.5	377.9	904.7	611.9	8.6
APSa 550-4	40	466.0	1124.3	411.2	5.7	434.0	1047.0	453.2	4.9	403.6	973.8	486.0	4.2	369.9	892.5	525.8	3.5	330.2	796.7	596.6	2.8
	42	482.8	1162.7	418.5	6.0	450.7	1085.3	460.4	5.3	419.3	1009.7	493.9	4.5	383.4	923.2	535.9	3.7	342.4	824.5	607.5	3.0
	44	501.2	1204.8	424.8	6.4	466.9	1122.4	468.8	5.6	434.3	1044.1	503.1	4.8	398.3	957.6	544.4	4.0	356.0	855.8	617.0	3.2
	45	510.2	1225.6	428.0	6.6	474.8	1140.6	473.3	5.8	441.7	1061.0	508.1	4.9	405.5	974.0	549.0	4.1	362.8	871.6	621.7	3.3
	46	519.2	1246.2	431.9	6.8	483.1	1159.7	477.9	6.0	449.4	1078.7	513.3	5.1	412.5	990.2	554.6	4.2	369.9	888.0	626.5	3.4
	48	537.2	1287.7	439.9	7.3	499.8	1198.0	487.2	6.3	464.8	1114.1	523.5	5.4	427.5	1024.8	564.2	4.5	383.8	920.1	636.3	3.7
	50	555.5	1330.1	447.9	7.7	516.7	1237.2	496.7	6.7	481.1	1152.0	532.8	5.7	443.3	1061.5	573.0	4.8	396.9	950.3	648.6	3.9
APSa 580-4	40	501.5	1210.0	465.3	6.5	465.5	1123.1	515.2	5.7	432.1	1042.5	552.9	4.8	394.9	952.6	598.4	4.0	350.8	846.2	679.6	3.2
	42	519.4	1250.8	474.0	6.9	482.4	1161.8	524.5	6.0	448.7	1080.5	561.7	5.1	410.2	987.9	607.8	4.2	364.6	878.1	690.1	3.4
	44	537.7	1292.6	482.8	7.4	500.8	1203.9	532.8	6.4	464.6	1116.8	572.8	5.5	424.7	1020.9	620.0	4.5	377.5	907.5	703.8	3.6
	45	546.9	1313.9	487.2	7.6	509.7	1224.4	537.6	6.6	472.6	1135.3	578.6	5.6	432.1	1038.0	626.3	4.6	384.9	924.7	709.3	3.7
	46	556.4	1335.5	491.7	7.8	518.4	1244.4	542.8	6.8	480.6	1153.7	584.3	5.8	439.4	1054.7	632.4	4.8	392.6	942.3	714.8	3.9
	48	575.4	1379.5	500.9	8.3	536.1	1285.2	553.4	7.3	497.0	1191.4	595.9	6.1	455.9	1093.0	642.9	5.1	407.0	975.6	726.6	4.1
	50	595.1	1424.8	510.2	8.8	554.3	1327.3	564.2	7.7	513.8	1230.2	607.8	6.5	472.4	1131.2	653.3	5.4	420.7	1007.2	740.7	4.4
APSa 600-4	40	526.7	1270.8	467.1	5.3	489.6	1181.2	516.6	4.6	454.5	1096.6	555.0	3.9	416.2	1004.0	600.2	3.2	370.5	893.9	681.0	2.6
	42	545.6	1313.9	475.9	5.6	507.0	1221.0	526.9	4.9	470.7	1133.5	566.3	4.1	430.9	1037.7	612.4	3.4	383.8	924.3	694.7	2.7
	44	564.9	1358.1	484.8	6.0	524.9	1261.9	537.3	5.2	487.3	1171.4	577.9	4.4	447.9	1076.8	622.5	3.7	399.4	960.1	705.6	2.9
	45	574.8	1380.8	489.3	6.1	534.0	1282.8	542.7	5.3	496.3	1192.1	582.8	4.5	456.3	1096.1	627.3	3.8	406.8	977.3	710.8	3.0
	46	584.7	1403.5	493.8	6.3	543.1	1303.8	548.0	5.5	505.7	1213.9	587.6	4.7	464.4	1114.7	633.4	3.9	414.1	993.9	717.8	3.1
	48	604.9	1450.1	503.1	6.7	561.8	1346.8	558.8	5.8	524.0	1256.2	597.5	5.0	480.2	1151.1	646.1	4.1	429.0	1028.5	730.7	3.3
	50	625.7	1498.2	512.6	7.1	581.0	1391.2	569.8	6.2	541.8	1297.3	609.6	5.3	496.4	1188.6	659.0	4.4	445.5	1066.6	741.8	3.6

LEGEND
- LWT : Leaving Water Temperature [°F]
- T.CAP : Capacity [T.R]
- PI : Power Input (Compressor only) [kW]
- GPM : Water flow rate
- WPD : Water Pressure Drop [Psi]

NOTE

All cooling capacities are based on 10°F water temperature difference between inlet and outlet water temperature.

PERFORMANCE TABLES [60 Hz]

MODEL	LWT	AMBIENT TEMPERATURE [°F]																			
		85				95				105				115				125			
		T.CAP	WFR	PI	WPD	T.CAP	WFR	PI	WPD	T.CAP	WFR	PI	WPD	T.CAP	WFR	PI	WPD	T.CAP	WFR	PI	WPD
APSa 50-1	40	51.4	124.1	52.5	1.8	47.8	115.3	58.1	1.6	45.3	109.2	62.5	1.3	42.2	101.9	67.7	1.1	37.5	90.4	77.1	0.9
	42	53.3	128.3	53.5	1.9	49.5	119.3	59.1	1.7	46.9	113.0	63.6	1.4	43.8	105.6	68.9	1.2	39.0	94.0	78.3	0.9
	44	55.2	132.6	54.5	2.0	51.4	123.6	60.0	1.8	48.7	117.1	64.6	1.5	45.5	109.4	69.9	1.2	40.5	97.4	79.5	1.0
	45	56.1	134.8	55.0	2.1	52.3	125.7	60.6	1.8	49.6	119.1	65.2	1.6	46.3	111.3	70.7	1.3	41.3	99.1	80.3	1.0
	46	57.1	137.1	55.5	2.2	53.2	127.8	61.2	1.9	50.4	121.1	65.9	1.6	47.1	113.1	71.3	1.3	41.9	100.7	81.1	1.1
	48	59.1	141.6	56.5	2.3	55.1	132.0	62.4	2.0	52.2	125.1	67.2	1.7	48.7	116.8	72.8	1.4	43.4	104.0	82.6	1.1
	50	61.1	146.3	57.6	2.4	57.0	136.4	63.6	2.1	54.0	129.2	68.5	1.8	50.4	120.6	74.2	1.5	45.1	108.0	83.9	1.2
APSa 60-1	40	55.4	133.7	50.1	2.1	51.8	125.0	54.6	1.8	49.5	119.3	56.9	1.6	46.8	112.8	59.6	1.3	42.1	101.7	67.9	1.1
	42	57.6	138.6	50.7	2.2	53.9	129.7	55.3	2.0	51.5	123.9	57.7	1.7	48.7	117.2	60.5	1.4	43.9	105.7	68.8	1.2
	44	59.7	143.6	51.4	2.4	55.9	134.5	56.1	2.1	53.5	128.6	58.5	1.8	50.5	121.5	61.4	1.5	45.7	109.9	69.7	1.3
	45	60.9	146.2	51.8	2.5	57.0	136.8	56.5	2.2	54.5	130.9	58.9	1.9	51.5	123.8	61.9	1.6	46.6	111.9	70.2	1.3
	46	62.0	148.8	52.1	2.5	58.0	139.2	57.0	2.2	55.5	133.3	59.4	1.9	52.5	125.9	62.3	1.6	47.5	114.0	70.6	1.3
	48	64.3	154.2	52.8	2.7	60.2	144.3	57.8	2.4	57.6	138.1	60.3	2.1	54.5	130.7	63.2	1.8	49.4	118.5	71.6	1.4
	50	66.7	159.6	53.6	2.9	62.4	149.4	58.7	2.6	59.8	143.3	61.1	2.2	56.6	135.6	64.1	1.9	51.3	122.9	72.6	1.6
APSa 65-1	40	60.6	146.3	57.8	2.5	56.6	136.6	63.1	2.2	54.0	130.4	65.8	1.9	50.9	122.8	69.3	1.6	45.9	110.6	78.9	1.3
	42	63.3	152.5	58.7	2.7	59.1	142.4	64.2	2.3	56.4	135.8	67.0	2.0	53.1	127.9	70.6	1.7	47.8	115.0	80.2	1.4
	44	65.7	157.9	59.5	2.9	61.4	147.6	65.2	2.5	58.6	140.8	68.1	2.2	55.2	132.6	71.6	1.8	49.8	119.7	81.3	1.5
	45	66.9	160.8	59.9	3.0	62.5	150.2	65.7	2.6	59.6	143.3	68.6	2.2	56.3	135.2	72.1	1.9	50.8	122.0	81.9	1.5
	46	68.2	163.7	60.3	3.1	63.7	152.8	66.2	2.7	60.8	145.9	69.2	2.3	57.4	137.8	72.6	1.9	51.8	124.3	82.4	1.6
	48	70.6	169.4	61.3	3.3	66.1	158.4	67.2	2.9	63.0	151.1	70.2	2.5	59.6	142.9	73.6	2.1	53.8	129.0	83.6	1.7
	50	73.2	175.2	62.2	3.5	68.5	164.0	68.2	3.1	65.4	156.6	71.3	2.6	61.9	148.2	74.8	2.2	55.8	133.6	84.9	1.8
APSa 70-1	40	64.9	156.5	58.6	2.8	60.6	146.2	63.9	2.5	57.9	139.6	68.2	2.1	54.6	131.7	73.5	1.8	49.2	118.6	83.9	1.5
	42	67.9	163.5	59.6	3.1	63.4	152.8	65.0	2.7	60.6	145.9	69.4	2.3	57.2	137.8	74.9	2.0	51.5	124.1	85.2	1.6
	44	70.6	169.7	60.4	3.3	66.0	158.6	66.1	2.9	63.0	151.4	70.5	2.5	59.4	142.7	76.1	2.1	53.6	128.8	86.5	1.7
	45	71.9	172.8	60.8	3.4	67.2	161.4	66.6	3.0	64.1	154.1	71.0	2.6	60.5	145.4	76.7	2.2	54.6	131.1	87.2	1.8
	46	73.2	175.8	61.2	3.5	68.4	164.2	67.0	3.1	65.4	156.9	71.6	2.7	61.6	147.9	77.3	2.2	55.7	133.6	87.8	1.8
	48	76.0	182.2	62.1	3.8	71.0	170.3	68.1	3.3	67.8	162.5	72.7	2.8	64.1	153.5	78.4	2.4	57.9	138.9	89.0	2.0
	50	78.7	188.5	62.9	4.0	73.6	176.3	69.1	3.5	70.4	168.5	73.9	3.0	66.6	159.4	79.5	2.6	60.1	144.0	90.2	2.1
APSa 70-2	40	65.8	158.8	63.3	2.9	61.5	148.4	69.1	2.5	58.6	141.4	73.7	2.2	55.2	133.2	79.8	1.8	49.6	119.8	91.1	1.5
	42	68.9	166.0	64.3	3.2	64.4	155.1	70.4	2.8	61.4	148.0	75.1	2.4	57.9	139.4	81.2	2.0	52.2	125.7	92.6	1.6
	44	71.8	172.5	65.3	3.4	67.0	161.0	71.5	3.0	63.9	153.7	76.4	2.6	60.2	144.8	82.5	2.1	54.3	130.4	93.7	1.8
	45	73.1	175.5	65.7	3.5	68.3	164.0	72.0	3.1	65.1	156.5	77.0	2.6	61.4	147.4	83.1	2.2	55.4	133.0	94.4	1.8
	46	74.5	178.7	66.2	3.6	69.6	167.0	72.6	3.2	66.3	159.2	77.6	2.7	62.6	150.3	83.7	2.3	56.5	135.7	95.0	1.9
	48	77.2	185.1	67.1	3.9	72.1	172.9	73.6	3.4	68.9	165.1	78.8	2.9	65.1	156.1	84.9	2.5	58.7	140.8	96.3	2.0
	50	80.1	191.8	68.1	4.1	74.8	179.0	74.7	3.6	71.4	170.9	80.0	3.1	67.5	161.7	86.1	2.6	61.0	146.0	97.8	2.2
APSa 75-1	40	74.7	180.3	71.7	2.5	69.8	168.5	78.5	2.2	66.5	160.4	82.0	1.9	62.5	150.8	86.5	1.6	56.1	135.2	98.3	1.3
	42	77.5	186.6	72.8	2.6	72.5	174.6	79.7	2.3	69.1	166.4	83.4	2.0	64.9	156.3	87.8	1.7	58.3	140.4	99.9	1.4
	44	80.4	193.3	73.9	2.8	75.2	180.8	80.9	2.5	71.7	172.4	84.7	2.1	67.4	162.1	89.2	1.8	60.6	145.6	101.4	1.4
	45	81.9	196.8	74.4	2.9	76.6	183.9	81.7	2.6	73.1	175.5	85.4	2.2	68.7	165.0	89.9	1.8	63.6	148.5	103.1	2.0
	46	83.5	200.4	74.9	3.0	77.9	186.9	82.4	2.6	74.4	178.6	86.0	2.3	70.0	168.0	90.6	1.9	63.1	151.4	102.8	1.6
	48	86.5	207.3	76.1	3.2	80.8	193.6	83.7	2.8	77.2	185.1	87.4	2.4	72.6	174.1	92.1	2.0	65.6	157.2	104.1	1.7
	50	89.5	214.3	77.3	3.4	83.7	200.4	85.0	3.0	80.0	191.4	88.8	2.6	75.4	180.4	93.5	2.2	68.1	163.1	105.7	1.8
APSa 80-1	40	81.8	197.3	81.3	2.9	76.3	184.0	89.3	2.6	72.4	174.7	93.7	2.2	68.0	164.1	98.6	1.8	60.9	147.0	112.4	1.5
	42	85.0	204.8	82.7	3.2	79.3	190.9	91.0	2.8	75.4	181.6	95.3	2.4	70.6	170.0	100.6	2.0	63.4	152.6	114.1	1.6
	44	88.2	212.1	83.9	3.4	82.1	197.5	92.6	2.9	78.3	188.2	96.8	2.5	73.4	176.4	102.2	2.1	65.9	158.4	115.9	1.7
	45	89.8	215.8	84.6	3.5	83.7	201.1	93.3	3.0	79.8	191.7	97.6	2.6	74.7	179.4	103.0	2.2	67.1	185.7	116.8	1.8
	46	91.4	219.3	85.3	3.6	85.2	204.6	94.0	3.1	81.2	194.9	98.3	2.7	76.1	182.8	103.8	2.2	68.4	164.3	117.7	1.8
	48	94.5	226.7	86.8	3.8	88.2	211.4	95.7	3.3	84.0	201.4	100.2	2.9	79.0	189.4	105.5	2.4	71.0	170.3	119.5	2.0
	50	98.0	234.7	88.2	4.1	91.4	218.9	97.3	3.6	87.1	208.6	101.9	3.1	82.0	196.3	107.1	2.6	73.4	175.8	121.8	2.1
APSa 95-2	40	89.5	215.8	90.3	2.8	83.3	200.9	99.5	2.5	79.1	190.9	106.7	2.1	74.0	178.4	115.7	1.7	65.8	158.7	131.9	1.4
	42	93.0	223.8	91.6	3.0	86.3	207.8	101.4	2.6	82.0	197.4	108.8	2.2	76.8	184.9	117.7	1.9	68.5	164.8	134.1	1.5
	44	96.3	231.6	93.2	3.2	89.6	215.4	103.0	2.8	85.2	204.8	110.5	2.4	79.5	191.2	120.0	2.0	71.1	171.0	136.1	1.6
	45	98.0	235.3	94.0	3.3	91.2	219.1	103.8	2.9	86.7	208.2	111.4	2.5	81.1	194.7	120.9	2.0	72.5	174.2	137.2	1.6
	46	99.7	239.4	94.8	3.4	92.8	222.9	104.8	3.0	88.2	211.8	112.5	2.5	82.6	198.3	121.9	2.1	73.9	177.4	138.2	1.7
	48	103.2	247.3	96.6	3.6	96.0	230.2	106.8	3.2	91.3	218.8	114.8	2.7	85.5	205.1	124.1	2.3	76.6	183.6	140.7	1.8
	50	106.7	255.5	98.3	3.9	99.4	237.9	108.7	3.4	94.5	226.2	116.8	2.9	88.6	212.1	126.3	2.4	79.4	190.0	143.1	1.9
APSa 95-1	40	89.8	216.6	92.2	2.8	83.6	201.7	101.5	2.5	79.4	191.6	106.5	2.1	74.2	179.1	112.6	1.7	66.3	160.1	127.8	1.4
	42	93.3	224.6	93.6	3.0	86.9	209.2	103.2	2.6	82.3	198.1	108.5	2.2	77.1	185.7	114.3	1.9	69.0	166.1	129.7	1.5
	44	96.7	232.4	95.1	3.2	90.0	216.4	105.0	2.8	85.5	205.5	110.3	2.4	80.1	192.7	116.2	2.0	71.7	172.4	131.7	1.6
	45	98.3	236.1	96.0	3.3	91.5	219.9	106.0	2.9	87.0	209.0	111.1	2.5	81.6	196.0	117.1	2.1	73.0	175.4	132.9	1.7
	46	100.1	240.2	96.9	3.5	93.2	223.6	107.0	3.0	88.5	212.5	112.3	2.6	83.0	199.3	118.3	2.1	74.3	178.3	134.2	1.7
	48	103.5	248.1	98.6	3.7	96.4	231.0	109.1	3.2	91.7	219.8	114.3	2.7	86.0	206.2	120.4	2.3	77.1	184.7	136.5	1.8
	50	107.1	256.3	100.4	3.9	99.7	238.8	111.0	3.4	95.1	227.6	116.1	2.9	89.2	213.6	122.2	2.4	79.9	191.4	138.5	2.0
APSa 100-1	40	99.8	240.7	101.7	3.5	92.6	223.5	112.6	3.0	87.6	211.5	121.2	2.6	81.7	197.2	131.6	2.1	72.6	175.2	150.0	1.7
	42	103.8	249.9	103.8	3.7	96.3	231.8	115.0	3.2	91.1	219.4	123.9	2.7	84.9	204.4	134.4	2.2	75.4	181.5	152.9	1.8
	44	107.5	258.5	105.7	4.0	99.7	239.7	117.3	3.4	94.3	226.7	126.4	2.9	88.3	212.3	136.5	2.4	78.5	188.7	155.2	1.9
	45	109.4	262.8	106.7	4.1	101.4	243.6	118.5	3.6	96.0	230.7	127.5	3.0	89.9	215.9	137.5	2.5	79.9	192.0	156.4	2.0
	46	111.3	267.1	107.7	4.2	103.2	247.7	119.6	3.7	97.9	235.0	128.5	3.1	91.5	219.6	138.9	2.6	81.3	195.2	158.0	2.0
	48	115.2	276.1	109.7	4.5	106.8	256.0	122.0	3.9	101.4	243.2	130.6	3.3	94.6	226.8	141.6	2.7	84.3	202.1	160.7	2.2
	50	119.1	285.3	111.8	4.8	110.4	264.4	124.4	4.1	104.9	251.2	133.2	3.5	97.8	234.2	144.4	2.9	87.5	209.6	163.0	2.3
APSa 100-2	40	100.4	242.3	103.7	3.5	93.3	225.1	114.7	3.1	88.4	213.3	123.3	2.6	82.6	199.3	133.7	2.1	73.3	176.9	152.9	1.7
	42	104.4	251.5	105.8	3.8	97.0	233.6	117.1	3.3	91.9	221.3	126.0	2.8	85.8	206.6	136.5	2.3	76.4	183.9	155.2	1.8
	44	108.2	260.1	107.8	4.0	100.7	242.2	119.1	3.5	95.5	229.5	128.1	3.0	89.2	214.5	138.7	2.5	79.5	191.1	157.7	2.0
	45	110.1	264.4	108.8	4.2	102.6	246.4	120.0	3.6	97.2	233.5	129.1	3.1	90.8	218.2	139.7	2.5	80.9	194.4	158.9	2.0
	46	112.0	268.8	109.8	4.3	104.4	250.6	121.0	3.7	98.9	237.5	130.2	3.2	92.4	221.9	141.1	2.6	82.4	197.7	160.4	2.1
	48	115.9	277.9	111.8	4.6	108.0	259.0	123.4	4.0	102.3	245.3	132.8	3.4	95.6	229.2	143.9	2.8	85.2	204.3	163.6	2.2
	50	119.9	287.1	113.9	4.9	111.7	267.5	125.8	4.2	105.8	253.4	135.5	3.6	98.9	236.7	146.8	3.0	88.2	211.3	166.4	2.4
APSa 110-2	40	106.0	255.7	101.7	3.9	98.8	238.4	111.3	3.4	94.3	227.5	116.2	2.9	88.9	214.5	122.2	2.5	80.0	193.1	138.9	2.0
	42	110.4	265.9	103.3	4.2	103.1	248.3	113.2	3.7	98.5	237.3	118.0	3.2	92.7	223.3	124.1	2.7	83.5	201.0	141.1	2.2
	44	114.7	275.7	104.8	4.5	107.0	257.3	114.9	4.0	102.3	245.9	119.6	3.4	96.4	231.7	126.0	2.9	86.6	208.3	143.3	2.3
	45	116.8	280.5	105.5	4.7	109.1	262.0	115.8	4.1	104.3	250.5	120.6	3.5	98.1	235.7	127.0	3.0	88.4	212.3	144.4	2.4
	46	119.0	285.7	106.2	4.8	111.1	266.6	116.7	4.2	106.2	254.9	121.5	3.6	100.0	240.0	128.0	3.1	90.1	216.3	145.6	2.5
	48	123.4	295.7	107.8	5.2	115.2	276.2	118.4	4.5	110.2	264.2	123.5	3.9	103.8	248.7	130.0	3.3	93.5	224.0	147.8	2.7
	50	127.6	305.6	109.5	5.5	119.4	285.9	120.2	4.8	114.2	273.4	125.4	4.2	107.7	257.8	132.1	3.5	97.0	232.3	150.0	2.9

LEGEND
- LWT : Leaving Water Temperature [°F]
- T.CAP : Capacity [T.R]
- PI : Power Input (Compressor only) [kW]
- GPM : Water flow rate
- WPD : Water Pressure Drop [Psi]

NOTE

All cooling capacities are based on 10°F water temperature difference between inlet and outlet water temperature.

PERFORMANCE TABLES [60 Hz]

MODEL	LWT	AMBIENT TEMPERATURE [°F]																			
		85				95				105				115				125			
		T.CAP	WFR	PI	WPD	T.CAP	WFR	PI	WPD	T.CAP	WFR	PI	WPD	T.CAP	WFR	PI	WPD	T.CAP	WFR	PI	WPD
APSa 120-2	40	110.8	267.3	109.4	4.3	103.5	249.6	119.8	3.7	98.4	237.4	125.2	3.2	92.5	223.3	132.2	2.7	83.0	200.2	150.6	2.2
	42	115.7	278.7	111.5	4.6	108.2	260.5	122.0	4.1	103.0	248.1	127.7	3.5	96.7	232.8	134.6	2.9	86.8	209.1	153.3	2.4
	44	120.1	288.7	113.0	4.9	112.2	269.8	123.8	4.3	106.9	257.0	129.7	3.7	100.5	241.7	136.8	3.1	90.2	216.8	155.6	2.5
	45	122.3	293.9	113.8	5.1	114.3	274.5	125.0	4.5	109.0	261.8	130.7	3.8	102.3	245.8	137.8	3.2	92.1	221.2	156.7	2.6
	46	124.7	299.3	114.7	5.3	116.2	278.9	126.1	4.6	110.9	266.2	131.7	4.0	104.3	250.4	138.9	3.3	94.0	225.6	157.7	2.7
	48	129.2	309.7	116.4	5.6	120.6	289.0	128.1	4.9	115.1	276.0	133.8	4.3	108.2	259.3	141.0	3.6	97.6	234.0	159.7	2.9
	50	133.7	320.1	118.3	6.0	124.9	299.0	130.1	5.3	119.2	285.5	136.0	4.5	112.3	268.9	143.3	3.8	101.5	242.9	162.2	3.1
APSa 125-2	40	115.2	277.8	117.2	4.6	107.3	258.9	128.8	4.0	101.9	245.8	134.9	3.4	95.9	231.4	141.9	2.9	86.1	207.7	162.1	2.3
	42	120.5	290.3	119.3	5.0	112.3	270.5	131.2	4.4	106.8	257.2	137.5	3.7	100.5	242.1	144.7	3.1	90.2	217.2	165.1	2.5
	44	125.2	301.0	121.5	5.4	116.9	280.9	133.4	4.7	111.2	267.3	139.9	4.0	104.7	251.6	147.1	3.4	93.7	225.2	167.6	2.7
	45	127.6	306.6	122.4	5.6	119.0	285.8	134.7	4.8	113.3	272.1	141.0	4.1	106.6	256.1	148.2	3.5	95.5	229.5	168.9	2.8
	46	130.0	312.1	123.2	5.7	120.9	290.3	135.9	5.0	115.3	276.8	142.0	4.3	108.5	260.5	149.5	3.6	97.4	233.8	170.2	2.9
	48	134.7	322.9	125.2	6.1	125.6	301.1	138.0	5.3	119.8	287.1	144.3	4.6	112.2	269.1	152.4	3.8	101.1	242.3	172.7	3.1
	50	139.4	333.8	127.2	6.5	130.0	311.3	140.3	5.7	124.0	296.8	146.8	4.9	116.6	279.2	154.8	4.1	105.0	251.5	175.4	3.3
APSa 135-2	40	128.9	310.9	124.8	3.8	120.1	289.7	137.2	3.3	114.2	275.5	147.0	2.8	106.9	257.9	159.5	2.3	95.3	229.9	181.8	1.9
	42	134.3	323.4	126.8	4.0	125.1	301.3	139.5	3.5	118.5	285.4	150.0	3.0	111.2	267.8	162.1	2.5	99.2	238.9	184.8	2.0
	44	139.2	334.6	128.8	4.3	129.7	311.7	141.9	3.8	123.2	296.1	152.4	3.2	115.6	277.8	164.7	2.7	103.0	247.7	187.6	2.2
	45	141.5	340.0	129.9	4.4	131.8	316.7	143.2	3.9	125.4	301.2	153.6	3.3	117.6	282.6	165.9	2.8	105.1	252.4	189.1	2.2
	46	144.0	345.8	131.1	4.6	134.2	322.1	144.6	4.0	127.6	306.3	155.1	3.4	119.7	287.4	167.6	2.9	107.1	257.1	190.5	2.3
	48	149.1	357.5	133.3	4.9	138.9	332.9	147.2	4.2	132.1	316.6	157.9	3.6	124.0	297.2	170.6	3.0	111.2	266.6	193.4	2.5
	50	154.6	370.2	135.2	5.2	144.0	344.8	149.5	4.5	137.0	328.0	160.4	3.9	128.6	307.9	173.2	3.2	115.4	276.3	196.3	2.6
APSa 140-2	40	138.1	333.2	140.2	4.3	128.6	310.1	154.3	3.7	122.0	294.3	165.7	3.2	113.8	274.5	180.0	2.6	101.6	245.1	205.1	2.1
	42	144.1	346.9	142.8	4.6	133.9	322.3	157.7	4.0	127.1	306.1	169.2	3.4	118.9	286.4	183.3	2.9	105.8	254.7	209.2	2.3
	44	149.4	359.3	144.9	4.9	138.8	333.6	160.4	4.3	131.8	316.9	172.2	3.7	123.2	296.2	186.7	3.0	110.0	264.4	212.4	2.4
	45	152.1	365.5	146.2	5.1	141.4	339.8	161.7	4.4	134.4	322.8	173.5	3.8	125.3	301.0	188.4	3.1	112.1	269.2	213.9	2.5
	46	154.7	371.4	147.5	5.3	143.9	345.5	162.9	4.6	136.7	328.2	174.8	3.9	127.7	306.6	189.9	3.2	114.3	274.3	215.6	2.6
	48	160.1	383.8	150.1	5.6	148.9	357.1	166.0	4.9	141.5	339.1	178.3	4.1	132.5	317.6	192.8	3.5	118.5	284.2	218.9	2.8
	50	165.6	396.5	152.8	5.9	154.0	368.8	169.1	5.2	146.3	350.2	181.8	4.4	137.0	328.1	196.6	3.7	122.6	293.4	223.1	3.0
APSa 145-2	40	143.0	345.1	140.8	4.6	133.3	321.6	154.1	4.0	127.0	306.5	161.0	3.5	119.4	288.1	169.7	2.9	107.2	258.6	193.2	2.4
	42	149.2	359.2	143.3	5.0	139.4	335.6	156.8	4.3	132.6	319.4	163.9	3.7	124.8	300.4	172.8	3.1	112.0	269.6	196.6	2.5
	44	154.7	371.8	145.5	5.3	144.6	347.6	159.2	4.6	137.8	331.3	166.5	4.0	129.4	311.2	175.4	3.3	116.4	279.8	199.6	2.7
	45	157.6	378.6	146.6	5.5	147.4	354.0	160.4	4.8	140.3	336.9	167.8	4.1	132.0	317.0	176.8	3.5	118.6	284.9	201.2	2.8
	46	160.4	385.0	147.6	5.6	150.0	360.0	161.6	4.9	142.9	343.1	169.1	4.3	134.5	322.9	178.3	3.6	120.8	289.9	202.6	2.9
	48	166.5	399.0	149.7	6.0	155.2	372.1	164.5	5.3	148.2	355.4	171.7	4.5	139.5	334.4	181.0	3.8	125.8	301.5	205.3	3.1
	50	172.4	412.7	151.9	6.4	160.9	385.3	167.1	5.6	153.8	368.2	174.4	4.8	144.6	346.3	183.8	4.1	130.6	312.8	207.9	3.3
APSa 160-2	40	150.3	362.5	150.5	4.5	140.0	337.7	165.2	4.0	133.6	322.3	172.2	3.4	125.6	303.0	181.8	2.9	112.5	271.4	207.2	2.3
	42	157.3	378.8	153.1	4.9	146.4	352.6	168.2	4.3	139.8	336.6	175.5	3.7	131.3	316.2	185.2	3.1	117.7	283.4	211.0	2.5
	44	163.1	392.2	155.5	5.3	152.2	365.9	170.9	4.6	144.7	347.9	178.9	3.9	136.3	327.6	188.1	3.3	122.3	294.1	214.2	2.7
	45	166.0	398.7	156.8	5.4	154.9	372.2	172.1	4.8	147.4	354.1	180.4	4.1	138.9	333.7	189.6	3.4	124.7	299.6	215.9	2.8
	46	168.9	405.5	158.0	5.6	157.8	378.8	173.4	4.9	150.2	360.6	181.9	4.2	141.6	339.9	191.1	3.5	127.0	304.8	217.5	2.9
	48	175.3	420.3	160.3	6.0	163.8	392.6	176.1	5.2	155.7	373.3	184.6	4.5	146.7	351.6	194.3	3.8	132.0	316.4	220.9	3.1
	50	181.5	434.7	162.9	6.4	169.5	405.9	179.2	5.6	161.6	387.0	187.6	4.8	151.8	363.4	197.9	4.0	136.9	327.7	224.1	3.3
APSa 165-2	40	156.3	377.0	159.5	4.9	145.3	350.6	175.2	4.3	138.2	333.3	183.7	3.6	129.9	313.5	193.3	3.1	116.3	280.6	220.7	2.5
	42	163.4	393.5	162.6	5.3	152.3	366.7	178.6	4.6	144.6	348.1	187.2	4.0	136.0	327.5	197.2	3.3	122.0	293.9	224.9	2.7
	44	169.9	408.5	165.3	5.7	158.4	380.7	181.9	5.0	150.7	362.4	190.5	4.3	141.2	339.3	201.2	3.5	126.8	304.9	228.3	2.9
	45	173.2	416.0	166.5	5.9	161.0	386.8	183.5	5.1	153.4	368.4	191.9	4.4	143.9	345.7	202.9	3.7	129.3	310.7	230.1	3.0
	46	176.2	423.0	167.7	6.1	164.0	393.7	185.0	5.3	156.3	375.3	193.5	4.5	146.7	352.1	204.5	3.8	131.8	316.4	231.9	3.1
	48	182.4	437.3	170.5	6.5	170.1	407.8	187.8	5.6	162.1	388.6	196.4	4.9	152.1	364.7	207.6	4.1	136.9	328.2	235.4	3.3
	50	188.7	451.9	173.5	6.9	176.0	421.4	191.2	6.0	167.7	401.5	200.2	5.2	157.7	377.7	210.8	4.3	142.0	339.9	238.9	3.5
APSa 175-2	40	163.4	394.2	167.9	5.3	151.7	366.1	185.0	4.6	144.3	348.1	198.5	4.0	135.3	326.4	215.5	3.3	120.8	291.4	246.5	2.7
	42	170.8	411.3	171.4	5.8	159.1	383.1	188.6	5.0	151.0	363.7	203.0	4.3	141.5	340.7	220.2	3.6	126.7	305.0	251.0	2.9
	44	178.3	428.8	175.1	6.3	166.1	399.2	192.9	5.4	157.9	379.7	206.9	4.7	147.8	355.3	224.7	3.9	132.4	318.4	255.4	3.1
	45	181.8	436.7	176.5	6.5	169.3	406.7	194.4	5.6	160.8	386.2	209.0	4.8	150.6	361.8	226.4	4.0	134.9	324.0	257.2	3.2
	46	185.2	444.6	177.8	6.7	172.5	414.1	195.9	5.8	163.4	392.2	210.9	5.0	153.3	368.1	228.1	4.1	137.5	329.9	259.1	3.4
	48	191.9	460.0	180.5	7.1	178.7	428.3	199.2	6.2	169.7	406.8	214.3	5.3	159.3	382.0	231.8	4.4	142.9	342.6	263.1	3.6
	50	198.5	475.3	183.7	7.6	184.8	442.4	202.9	6.6	175.7	420.7	217.9	5.6	165.0	395.0	235.7	4.7	148.0	354.3	267.8	3.8
APSa 190-2	40	168.2	405.7	170.2	5.6	156.7	378.2	185.9	4.9	149.5	360.8	194.2	4.2	140.5	339.1	204.7	3.6	126.6	305.5	233.6	2.9
	42	176.4	424.8	173.2	6.2	164.3	395.8	189.4	5.4	156.7	377.4	198.0	4.6	147.9	356.2	208.3	3.9	132.7	319.5	237.8	3.2
	44	184.6	443.7	176.1	6.7	172.3	414.1	193.0	5.8	163.9	394.1	201.7	5.0	154.7	372.0	211.7	4.2	139.2	334.6	241.5	3.5
	45	188.1	452.0	177.4	6.9	175.3	421.0	194.4	6.0	167.1	401.5	203.3	5.2	157.8	379.2	213.4	4.4	141.9	341.0	243.1	3.6
	46	191.4	459.4	178.5	7.1	178.6	428.7	195.9	6.2	170.4	409.0	205.0	5.4	160.9	386.2	215.1	4.5	144.6	347.2	244.7	3.7
	48	198.7	476.3	181.1	7.6	185.2	444.1	198.8	6.7	176.5	423.2	208.1	5.7	166.8	399.9	218.4	4.8	150.3	360.4	248.6	4.0
	50	205.8	492.9	183.7	8.1	192.2	460.2	201.9	7.1	183.1	438.5	211.3	6.1	173.0	414.1	221.8	5.2	155.9	373.3	252.3	4.2
APSa 195-2	40	180.0	434.2	183.9	5.1	167.5	404.2	202.4	4.5	159.1	383.8	218.0	3.8	149.2	360.0	236.1	3.2	133.0	320.9	270.1	2.5
	42	188.8	454.7	187.4	5.6	175.2	421.9	207.1	4.8	166.4	400.7	222.5	4.1	156.2	376.1	241.3	3.4	139.6	336.1	275.2	2.8
	44	196.7	473.0	191.0	6.0	183.0	440.0	210.8	5.2	173.3	416.7	227.2	4.4	162.5	390.7	245.9	3.7	145.5	349.7	279.6	3.0
	45	200.1	480.7	192.7	6.2	186.3	447.4	212.6	5.4	176.7	424.5	229.1	4.6	165.7	398.0	247.9	3.8	148.3	356.3	281.8	3.1
	46	203.6	488.8	194.4	6.4	189.5	454.9	214.7	5.6	179.9	431.8	230.8	4.8	168.7	404.9	249.7	4.0	151.0	362.5	283.9	3.2
	48	210.8	505.4	197.9	6.8	196.2	470.2	218.8	5.9	186.3	446.5	235.1	5.1	174.6	418.5	254.5	4.2	156.2	374.5	289.4	3.4
	50	218.2	522.4	201.5	7.3	202.9	485.9	223.1	6.3	193.1	462.3	239.2	5.4	181.2	433.7	258.8	4.5	162.4	388.7	293.8	3.6
APSa 200-2	40	184.7	445.7	187.1	5.4	172.5	416.1	204.8	4.7	164.0	395.6	214.3	4.0	154.2	372.0	226.4	3.4	138.3	333.6	258.5	2.7
	42	193.5	465.9	190.6	5.9	180.7	435.2	208.7	5.1	171.9	413.9	218.5	4.4	161.6	389.1	230.8	3.7	145.1	349.5	263.4	3.0
	44	201.9	485.5	193.8	6.4	188.5	453.2	212.6	5.6	179.6	431.7	222.5	4.8	168.5	405.2	234.9	4.0	151.3	363.7	267.8	3.2
	45	205.8	494.3	195.1	6.6	191.7	460.6	214.5	5.7	182.9	439.4	224.2	4.9	171.8	412.6	236.7	4.1	154.2	370.5	269.8	3.3
	46	209.6	503.1	196.5	6.8	195.1	468.4	216.3	5.9	186.1	446.7	226.1	5.1	175.1	420.4	238.6	4.3	157.0	376.9	271.8	3.4
	48	217.1	520.5	199.7	7.2	202.6	485.7	219.7	6.3	192.6	461.8	230.4	5.4	181.5	435.2	242.2	4.5	163.2	391.3	276.0	3.7
	50	225.0	538.7	202.8	7.7	209.8	502.4	223.5	6.7	200.0	478.8	234.1	5.8	188.5	451.3	246.1	4.9	169.3	405.4	280.1	4.0
APSa 210-2	40	210.7	508.3	209.2	7.1	195.3	471.3	232.0	6.1	184.6	445.4	249.7	5.2	172.0	414.9	270.1	4.2	152.4	367.6	307.0	3.4
	42	218.2	525.4	213.1	7.5	202.2	487.0	236.5	6.5	191.3	460.6	254.5	5.5	178.7	430.4	274.4	4.5	158.5	381.7	311.7	3.6
	44	225.8	543.0	217.1	8.0	209.3	503.2	241.2	6.9	198.6	477.5	258.6	5.9	185.1	445.1	279.7	4.8	164.2	394.7	317.6	3.8
	45	229.8	552.1	219.2	8.3	213.0	511.6	243.6	7.1	202.2	485.7	260.7	6.1	188.3	452.3	282.4	5.0	167.3	401.8	320.3	4.0
	46	233.7	561.0	221.2	8.5	216.6	519.8	245.9	7.3	205.7	493.8	263.4	6.3	191.5	459.8	285.3	5.1	170.6	409.5	322.8	4.1
	48	241.8	579.6	225.3	9.0	224.0	536.9	250.7	7.8	212.8	510.1	268.6	6.6	198.1	474.9	291.0	5.5	177.0	424.3	327.8	4.4
	50	250.0	598.7	229.6	9.6	231.6	554.5	255.7	8.3	220.0	526.7	274.0	7.1	204.8	490.4	296.7	5.8	183.0	438.1	334.2	4.7

LEGEND
- LWT : Leaving Water Temperature [°F]
- T.CAP : Capacity [T.R]
- PI : Power Input (Compressor only) [kW]
- GPM : Water flow rate
- WPD : Water Pressure Drop [Psi]

NOTE

All cooling capacities are based on 10°F water temperature difference between inlet and outlet water temperature.

PERFORMANCE TABLES [60 Hz]

MODEL	LWT	AMBIENT TEMPERATURE [°F]																			
		85				95				105				115				125			
		T.CAP	WFR	PI	WPD	T.CAP	WFR	PI	WPD	T.CAP	WFR	PI	WPD	T.CAP	WFR	PI	WPD	T.CAP	WFR	PI	WPD
APSa 220-2	40	219.5	529.6	208.0	7.7	204.1	492.5	229.4	6.7	194.1	468.3	240.1	5.7	181.7	438.4	253.3	4.7	162.7	392.6	287.2	3.8
	42	227.5	547.9	211.5	8.2	212.0	510.5	233.0	7.1	201.1	484.2	244.7	6.1	188.7	454.5	257.3	5.1	169.2	407.3	291.6	4.1
	44	235.5	566.3	215.2	8.7	219.6	527.9	237.2	7.6	208.8	501.9	248.6	6.5	196.0	471.3	261.4	5.4	175.8	422.7	296.2	4.4
	45	239.6	575.5	217.1	8.9	223.4	536.6	239.3	7.8	212.6	510.7	250.5	6.7	199.7	479.6	263.5	5.6	179.0	430.0	298.7	4.5
	46	243.8	585.3	219.1	9.2	227.6	546.3	241.2	8.1	216.6	520.0	252.6	6.9	203.5	488.5	265.6	5.8	182.1	437.1	301.7	4.7
	48	252.6	605.5	222.6	9.8	236.0	565.6	244.9	8.6	224.6	538.5	256.5	7.4	211.1	505.9	269.8	6.2	188.8	452.7	306.8	5.0
	50	261.8	626.8	225.9	10.5	244.0	584.2	249.6	9.2	232.2	556.1	261.6	7.8	218.2	522.4	275.1	6.6	195.9	469.1	311.4	5.3
APSa 235-2	40	236.2	569.9	234.3	8.8	219.7	530.1	258.4	7.7	208.5	503.1	270.8	6.5	194.4	469.0	286.6	5.4	173.3	418.1	325.3	4.3
	42	244.7	589.3	238.5	9.4	227.6	548.1	263.3	8.2	216.0	520.1	276.1	7.0	201.9	486.3	291.1	5.8	180.2	433.8	330.3	4.6
	44	253.4	609.2	242.8	10.0	235.6	566.4	268.4	8.7	223.5	537.4	281.7	7.4	209.1	502.6	296.8	6.1	186.5	448.4	336.9	4.9
	45	257.7	619.2	245.0	10.3	239.6	575.7	271.0	9.0	227.5	546.6	284.1	7.6	212.9	511.5	299.4	6.3	190.1	456.7	339.6	5.1
	46	262.2	629.5	247.2	10.6	243.8	585.2	273.6	9.2	231.9	556.6	286.4	7.9	217.0	521.0	301.8	6.6	193.9	465.4	342.2	5.3
	48	271.3	650.4	251.7	11.3	252.7	605.7	278.2	9.8	240.3	576.1	291.1	8.4	225.0	539.3	306.7	7.0	201.0	481.8	347.8	5.6
	50	280.6	671.9	256.3	12.0	261.8	626.8	282.5	10.5	248.4	594.9	296.8	8.9	232.5	556.8	312.7	7.4	208.0	497.9	354.2	6.0
APSa 250-2	40	261.9	632.0	249.3	10.0	243.0	586.3	275.9	8.6	225.2	543.3	296.6	7.3	205.6	496.2	321.3	6.0	182.6	440.5	365.2	4.8
	42	271.3	653.3	253.9	10.6	251.6	606.0	281.3	9.2	234.1	563.7	301.4	7.8	213.9	515.1	326.4	6.4	190.0	457.5	370.8	5.1
	44	280.9	675.3	258.6	11.3	261.4	628.4	285.8	9.8	242.6	583.3	306.8	8.3	221.7	533.0	332.3	6.9	196.9	473.4	377.6	5.5
	45	285.9	686.7	261.0	11.6	266.1	639.2	288.0	10.1	246.7	592.6	309.8	8.6	225.4	541.4	335.5	7.1	200.3	481.2	381.0	5.6
	46	290.7	697.9	263.4	12.0	270.8	650.1	290.6	10.5	251.0	602.5	312.9	8.8	229.4	550.6	338.9	7.3	204.3	490.5	383.9	5.8
	48	300.8	721.0	268.2	12.7	280.1	671.4	296.3	11.1	259.5	622.1	319.1	9.4	237.2	568.6	345.6	7.7	212.1	508.6	389.6	6.2
	50	311.1	744.8	273.2	13.5	289.5	693.3	302.0	11.8	268.3	642.3	325.4	10.0	245.4	587.6	351.9	8.2	219.4	525.3	397.1	6.6
APSa 275-2	40	278.8	672.7	268.1	8.0	258.4	623.3	297.3	6.9	239.0	576.5	320.2	5.8	217.7	525.1	347.1	4.8	192.5	464.4	394.9	3.8
	42	288.7	695.3	273.1	8.5	267.5	644.2	303.2	7.3	247.4	595.8	326.7	6.2	225.4	542.8	354.2	5.1	200.1	481.8	401.4	4.0
	44	298.0	716.3	279.2	9.0	276.9	665.6	309.1	7.8	256.1	615.6	333.2	6.6	233.7	561.9	360.4	5.4	207.9	499.8	407.5	4.3
	45	302.8	727.5	282.3	9.2	281.6	676.4	312.1	8.0	260.4	625.5	336.5	6.8	238.3	572.5	363.3	5.6	211.6	508.3	411.6	4.5
	46	308.0	739.4	284.9	9.5	286.4	687.5	315.2	8.3	264.9	635.8	339.9	7.0	242.7	582.5	366.0	5.8	215.1	516.4	415.5	4.6
	48	318.6	763.8	290.3	10.1	296.2	710.0	321.3	8.8	273.8	656.5	346.6	7.4	251.1	601.9	373.1	6.2	222.5	533.4	423.6	4.9
	50	329.5	788.9	295.8	10.7	306.2	733.1	327.6	9.3	283.1	677.7	353.5	7.9	259.5	621.4	380.4	6.5	230.1	550.8	431.7	5.2
APSa 285-2	40	287.7	694.2	285.5	8.5	266.2	642.1	317.3	7.3	245.6	592.5	342.2	6.1	224.2	540.9	369.9	5.1	198.2	478.1	420.0	4.0
	42	298.0	717.6	290.9	9.0	275.6	663.7	323.6	7.8	254.3	612.4	349.2	6.5	232.6	560.1	376.4	5.4	205.3	494.4	428.3	4.2
	44	308.4	741.5	296.4	9.6	285.2	685.7	329.9	8.3	264.0	634.7	355.1	7.0	240.7	578.7	383.8	5.7	212.5	511.0	436.6	4.5
	45	313.3	752.7	299.5	9.9	290.1	696.8	333.1	8.5	268.9	646.0	357.8	7.2	244.8	588.1	387.6	5.9	216.1	519.2	440.7	4.6
	46	317.8	762.8	303.7	10.1	295.1	708.4	336.5	8.8	273.7	657.0	360.8	7.4	249.0	597.6	391.4	6.1	220.3	528.7	444.2	4.8
	48	328.7	788.0	309.4	10.7	305.2	731.7	343.1	9.3	282.8	677.9	368.3	7.9	257.4	617.2	399.1	6.5	228.9	548.7	450.8	5.2
	50	339.9	813.9	315.3	11.4	315.6	755.7	349.8	9.9	291.2	697.1	377.9	8.3	266.1	637.2	406.9	6.8	236.9	567.3	459.0	5.5
APSa 300-2	40	301.5	727.4	273.9	8.3	280.3	676.3	302.4	7.2	260.4	628.2	324.6	6.1	238.3	575.0	351.6	5.1	212.3	512.3	399.1	4.1
	42	312.2	751.9	278.9	8.8	290.3	699.1	308.3	7.6	269.7	649.4	331.2	6.5	247.7	596.6	357.2	5.4	221.0	532.2	405.4	4.4
	44	323.3	777.3	284.0	9.4	300.9	723.4	313.7	8.1	279.5	672.0	337.0	6.9	257.1	618.1	362.9	5.8	229.5	551.8	411.9	4.7
	45	328.8	789.9	286.5	9.6	306.6	736.6	316.2	8.4	284.9	684.5	339.8	7.2	261.6	628.5	366.6	6.0	233.5	561.0	416.0	4.8
	46	334.6	803.1	289.2	9.9	312.1	749.1	318.5	8.7	290.0	696.3	342.4	7.4	266.0	638.5	370.2	6.2	237.5	570.2	419.8	5.0
	48	346.1	829.7	294.5	10.6	322.9	774.0	324.6	9.2	300.0	719.2	349.1	7.9	275.1	659.5	377.6	6.5	246.9	591.9	426.3	5.3
	50	358.0	857.1	299.9	11.2	333.9	799.5	330.9	9.8	310.2	742.7	356.0	8.3	285.6	683.7	383.7	7.0	255.8	612.4	433.7	5.7
APSa 315-3	40	317.3	765.6	304.4	9.1	294.4	710.2	337.0	7.9	272.8	658.1	362.6	6.7	249.6	602.2	392.1	5.5	221.7	534.9	445.8	4.4
	42	328.6	791.4	310.0	9.7	304.9	734.2	343.6	8.4	282.7	680.8	369.4	7.1	259.3	624.5	398.3	5.9	230.5	555.1	452.5	4.7
	44	340.2	817.9	315.8	10.3	315.7	759.1	350.1	8.9	293.7	706.0	375.3	7.6	268.6	645.6	406.0	6.3	238.6	573.7	461.4	5.0
	45	346.3	831.9	318.8	10.6	321.8	773.1	352.9	9.2	298.9	718.0	378.6	7.9	273.2	656.3	410.1	6.5	242.9	583.4	466.0	5.2
	46	352.2	845.4	321.6	11.0	327.8	787.0	355.7	9.6	304.1	730.1	382.4	8.1	277.9	667.1	414.2	6.7	247.0	592.8	470.4	5.3
	48	364.3	873.2	327.6	11.6	339.4	813.6	362.0	10.2	314.6	754.1	390.1	8.6	287.5	689.1	422.5	7.1	256.5	615.0	477.9	5.7
	50	376.8	902.1	333.7	12.4	351.0	840.4	369.1	10.8	325.2	778.7	397.8	9.1	297.2	711.7	430.8	7.5	266.0	637.0	485.5	6.1
APSa 315-2	40	318.6	768.6	300.4	9.2	295.6	713.2	332.6	8.0	273.8	660.7	357.8	6.7	250.5	604.4	387.0	5.6	222.6	536.9	439.9	4.4
	42	329.9	794.5	305.9	9.8	306.1	737.1	339.1	8.5	283.8	683.4	364.6	7.2	260.3	626.9	393.1	6.0	231.4	557.2	446.6	4.8
	44	341.6	821.3	311.6	10.4	316.9	761.8	345.8	9.0	294.8	708.7	370.4	7.7	269.6	648.2	400.7	6.4	239.6	576.0	455.3	5.1
	45	347.7	835.2	314.6	10.7	322.4	774.5	349.2	9.3	300.1	721.0	373.6	7.9	274.3	658.9	404.7	6.5	243.8	585.7	459.9	5.2
	46	353.5	848.7	317.4	11.1	327.9	787.0	352.5	9.6	305.4	733.0	377.4	8.2	279.0	669.7	408.7	6.7	247.9	595.2	464.3	5.4
	48	365.7	876.7	323.3	11.7	339.1	812.8	359.4	10.1	315.8	757.1	384.9	8.7	288.6	691.9	416.9	7.2	257.5	617.3	471.7	5.8
	50	378.3	905.7	329.4	12.5	350.6	839.5	366.4	10.8	326.5	781.8	392.6	9.2	299.0	716.0	424.0	7.6	267.1	639.5	479.1	6.1
APSa 335-2	40	347.0	837.2	334.3	9.0	321.2	774.9	371.5	7.7	298.4	719.9	398.1	6.6	271.5	655.1	431.7	5.4	239.8	578.5	491.0	4.2
	42	359.4	865.4	340.6	9.5	332.5	800.8	378.9	8.2	309.0	744.0	406.2	7.0	281.2	677.2	440.5	5.7	249.3	600.3	499.3	4.5
	44	372.1	894.6	347.2	10.1	344.3	827.6	386.5	8.7	319.6	768.5	414.3	7.4	291.1	699.8	449.4	6.1	259.1	622.9	507.0	4.9
	45	378.6	909.5	350.5	10.4	350.3	841.4	390.3	9.0	325.0	780.8	418.4	7.6	295.9	710.8	453.7	6.3	263.7	633.5	512.1	5.0
	46	385.2	924.5	353.8	10.8	356.2	855.1	394.2	9.3	330.7	793.8	422.6	7.9	301.1	722.7	458.3	6.4	268.1	643.5	516.8	5.2
	48	398.4	955.2	360.5	11.4	368.5	883.4	402.0	9.8	342.0	820.0	431.2	8.4	311.8	747.3	466.6	6.9	277.3	664.7	526.9	5.5
	50	410.3	982.4	369.5	12.0	381.0	912.3	409.9	10.4	353.6	846.6	439.7	8.9	323.6	774.7	473.8	7.3	286.7	686.6	537.1	5.8
APSa 350-3	40	361.2	871.5	330.4	9.7	335.7	809.8	365.2	8.4	311.6	751.8	392.4	7.1	285.2	688.2	424.6	5.9	253.8	612.3	482.3	4.7
	42	374.1	901.0	336.5	10.3	347.9	837.8	371.8	8.9	323.0	777.8	399.6	7.6	295.8	712.3	432.3	6.3	263.6	634.8	490.7	5.0
	44	387.3	931.2	342.7	10.9	361.1	868.2	377.7	9.6	335.4	806.2	406.0	8.1	307.2	738.5	439.0	6.7	273.9	658.5	498.1	5.4
	45	394.1	946.7	345.8	11.3	367.6	883.1	381.1	9.9	341.4	820.0	409.7	8.4	312.7	751.1	443.2	7.0	278.8	669.8	503.1	5.6
	46	400.9	962.4	349.0	11.6	373.9	897.7	384.8	10.2	347.2	833.4	413.8	8.6	318.0	763.4	447.7	7.2	283.4	680.3	507.8	5.7
	48	414.7	994.2	355.5	12.3	386.8	927.3	392.3	10.8	359.1	860.8	422.1	9.2	328.9	788.5	456.6	7.6	294.5	706.0	515.9	6.1
	50	429.0	1,027.1	362.1	13.1	400.1	957.9	400.0	11.5	371.3	889.1	430.6	9.7	341.1	816.6	464.3	8.1	305.3	730.9	524.3	6.6
APSa 375-3	40	378.2	912.4	356.3	10.6	350.8	846.5	394.7	9.1	325.0	784.1	424.7	7.7	296.7	715.8	460.1	6.4	263.1	634.7	523.2	5.1
	42	391.8	943.5	363.0	11.2	363.4	875.1	402.5	9.7	336.6	810.6	433.4	8.2	308.3	742.4	467.9	6.8	273.8	659.3	531.5	5.4
	44	405.7	975.4	369.8	12.0	376.3	904.6	410.5	10.3	349.1	839.3	440.9	8.8	319.9	769.2	475.6	7.3	284.3	683.5	540.3	5.8
	45	412.5	991.0	373.2	12.3	382.5	918.9	414.4	10.6	355.9	854.9	444.5	9.1	325.5	782.0	480.4	7.5	289.2	694.8	545.6	6.0
	46	419.9	1,007.9	376.7	12.7	389.3	934.5	418.6	11.0	362.2	869.4	447.9	9.4	331.0	794.7	485.1	7.7	294.4	706.7	550.3	6.2
	48	434.3	1,041.1	383.7	13.5	402.7	965.3	426.8	11.7	374.6	898.0	456.9	10.0	342.3	820.5	494.7	8.2	306.1	733.8	558.8	6.6
	50	449.1	1,075.3	390.9	14.3	416.2	996.6	435.1	12.4	387.3	927.2	465.9	10.6	353.9	847.3	504.6	8.7	317.0	758.9	568.6	7.0
APSa 400-3	40	403.5	973.4	371.0	12.0	374.9	904.6	409.8	10.4	348.1	839.9	440.2	8.8	318.8	769.2	476.3	7.3	284.0	685.2	541.0	5.9
	42	419.2	1009.4	376.8	12.8	389.5	938.0	416.5	11.1	361.8	871.3	447.4	9.5	331.6	798.6	484.0	7.8	295.6	711.9	549.5	6.3
	44	434.5	1044.5	382.8	13.6	403.8	970.8	423.5	11.9	375.0	901.6	455.1	10.1	343.7	826.3	492.5	8.4	306.6	737.1	559.3	6.7
	45	442.0	1061.8	386.2	14.1	410.8	986.7	427.6	12.2	381.5	916.4	459.7	10.4	349.5	839.5	497.3	8.6	311.7	748.7	564.6	6.9
	46	449.7	1079.5	389.8	14.5	417.9	1003.1	431.8	12.6	388.1	931.6	464.3	10.7	356.0	854.5	501.5	8.9	317.8	763.0	569.0	7.2
	48	465.2	1115.3	397.0	15.4	432.2	1036.1	440.2	13.4	401.3	962.1	473.5	11.4	369.6	886.1	509.4	9.5	330.0	791.1	577.5	7.7
	50	481.2	1152.2	404.3	16.4	447.0	1070.2	448.7	14.2	415.1	994.0	482.6	12.1	382.4	915.6	519.0	10.1	341.4	817.4	588.4	8.1

LEGEND
- LWT : Leaving Water Temperature [°F]
- T.CAP : Capacity [T.R]
- PI : Power Input (Compressor only) [kW]
- GPM : Water flow rate
- WPD : Water Pressure Drop [Psi]

NOTE

All cooling capacities are based on 10°F water temperature difference between inlet and outlet water temperature.

PERFORMANCE TABLES [60 Hz]

MODEL	LWT	AMBIENT TEMPERATURE [°F]																			
		85				95				105				115				125			
		T.CAP	WFR	PI	WPD	T.CAP	WFR	PI	WPD	T.CAP	WFR	PI	WPD	T.CAP	WFR	PI	WPD	T.CAP	WFR	PI	WPD
APSa 415-3	40	431.9	1041.9	418.8	13.6	400.4	965.9	464.3	11.8	372.1	897.7	497.9	10.0	339.5	819.0	539.6	8.3	301.0	726.1	613.7	6.6
	42	447.3	1077.1	426.6	14.5	416.1	1002.1	471.8	12.6	385.8	929.0	507.0	10.7	352.0	847.7	549.7	8.8	312.1	751.5	625.3	7.0
	44	463.1	1113.4	434.6	15.4	431.1	1036.4	479.9	13.4	399.2	959.8	517.1	11.4	364.5	876.2	560.7	9.4	323.1	776.9	637.6	7.4
	45	471.3	1132.2	438.7	15.9	438.5	1053.4	484.5	13.9	405.9	975.0	522.1	11.7	370.5	889.9	566.1	9.6	328.9	790.0	643.4	7.7
	46	479.4	1150.7	442.8	16.4	446.1	1071.0	489.3	14.3	413.0	991.3	527.4	12.1	377.1	905.2	571.9	9.9	335.4	805.2	648.3	7.9
	48	496.1	1189.2	451.1	17.4	461.5	1106.3	498.9	15.2	427.1	1023.9	537.9	12.8	389.9	934.6	583.1	10.6	348.2	834.8	657.8	8.5
	50	513.1	1228.4	459.6	18.5	476.2	1140.3	509.6	16.0	441.6	1057.3	548.6	13.6	403.4	965.9	593.7	11.2	360.1	862.1	670.4	9.0
APSa 430-3	40	442.0	1066.4	406.0	14.3	411.0	991.6	447.9	12.4	381.9	921.3	480.7	10.6	349.1	842.3	522.3	8.7	311.3	751.0	593.4	7.0
	42	457.8	1102.4	413.4	15.2	425.6	1024.9	456.6	13.2	395.5	952.4	490.4	11.2	362.6	873.3	530.5	9.3	323.6	779.3	602.4	7.5
	44	474.1	1139.7	421.0	16.1	440.7	1059.4	465.5	14.0	409.3	983.9	500.2	11.9	377.0	906.4	539.0	10.0	336.7	809.4	611.8	8.0
	45	482.5	1159.0	424.8	16.7	448.8	1078.1	469.4	14.5	416.9	1001.6	504.3	12.3	383.8	921.9	543.0	10.3	342.9	823.7	616.5	8.3
	46	490.7	1178.0	428.6	17.2	457.3	1097.8	473.1	15.0	424.9	1020.1	508.4	12.8	390.6	937.7	548.4	10.6	348.9	837.6	622.7	8.6
	48	507.9	1217.4	436.5	18.2	473.9	1136.0	480.9	16.0	440.4	1055.7	517.0	13.6	403.9	968.3	559.3	11.3	361.6	866.9	633.4	9.1
	50	525.3	1257.7	444.6	19.4	490.0	1173.1	490.2	16.9	455.3	1090.0	527.2	14.4	417.9	1000.6	569.6	12.0	375.3	898.5	642.8	9.8
APSa 450-3	40	450.7	1087.4	448.4	16.0	418.7	1010.1	494.9	13.9	386.9	933.5	533.8	11.7	352.1	849.4	579.4	9.6	311.0	750.2	660.1	7.5
	42	466.8	1124.2	456.9	17.1	433.5	1044.0	504.7	14.8	400.6	964.7	544.5	12.5	364.6	878.0	591.1	10.2	322.4	776.5	672.3	8.0
	44	483.2	1161.5	465.4	18.1	448.8	1079.0	514.7	15.7	414.5	996.6	555.4	13.2	377.3	907.1	602.8	10.8	335.6	806.8	682.5	8.6
	45	491.5	1180.6	469.8	18.7	456.7	1097.0	519.8	16.2	421.8	1013.4	561.0	13.7	384.1	922.8	609.0	11.2	341.8	821.1	687.7	8.9
	46	500.0	1200.3	474.2	19.3	464.5	1114.9	524.9	16.7	429.0	1029.9	566.6	14.1	390.4	937.1	614.7	11.5	347.9	835.2	694.6	9.2
	48	517.2	1239.9	483.2	20.5	478.2	1146.4	538.6	17.6	443.8	1063.9	577.9	14.9	405.5	972.1	624.7	12.3	359.9	862.8	708.0	9.8
	50	535.0	1280.9	492.3	21.8	494.5	1184.0	549.2	18.7	458.8	1098.6	589.4	15.9	420.1	1005.9	634.8	13.1	372.0	890.8	721.5	10.4
APSa 465-3	40	461.5	1113.5	434.3	16.8	429.0	1035.1	479.3	14.6	398.1	960.4	515.2	12.4	364.1	878.4	557.8	10.2	323.9	781.5	634.1	8.2
	42	478.4	1152.1	441.6	17.9	445.4	1072.6	486.9	15.6	413.2	995.0	523.3	13.2	378.1	910.5	566.5	10.9	336.5	810.4	644.2	8.7
	44	496.4	1193.5	448.3	19.1	461.1	1108.6	496.1	16.6	427.7	1028.2	533.6	14.1	391.4	940.9	577.9	11.6	348.5	837.9	656.6	9.3
	45	505.3	1214.0	452.1	19.7	469.2	1127.1	501.0	17.1	435.2	1045.4	539.0	14.5	398.3	956.8	583.8	12.0	355.5	854.1	661.7	9.6
	46	514.1	1234.0	456.2	20.3	477.2	1145.5	505.8	17.6	442.6	1062.5	544.3	14.9	404.9	972.0	589.4	12.3	362.6	870.3	666.8	10.0
	48	532.0	1275.2	464.7	21.6	493.7	1183.5	515.7	18.7	457.9	1097.7	555.2	15.9	420.4	1007.8	599.1	13.2	375.8	900.8	678.1	10.6
	50	548.0	1312.1	475.9	22.8	510.7	1222.7	525.8	19.9	473.4	1133.5	566.2	16.9	435.6	1043.1	608.9	14.1	388.3	929.8	691.1	11.3
APSa 475-3	40	478.6	1154.7	459.3	14.4	444.0	1071.1	508.7	12.5	411.2	992.2	547.6	10.6	375.8	906.7	594.3	8.7	333.1	803.7	676.5	6.9
	42	496.5	1195.7	468.2	15.4	460.4	1108.7	519.0	13.3	426.3	1026.7	559.0	11.3	389.1	936.9	606.1	9.3	346.0	833.1	688.0	7.4
	44	514.0	1235.6	476.8	16.3	476.5	1145.5	529.2	14.1	441.2	1060.7	570.1	11.9	403.1	969.1	617.3	9.9	359.5	864.4	698.2	7.9
	45	523.2	1256.8	481.4	16.8	485.0	1165.0	534.4	14.5	448.9	1078.3	575.8	12.3	411.0	987.3	622.2	10.2	366.1	879.4	705.0	8.2
	46	531.9	1276.9	485.7	17.3	493.0	1183.5	539.5	15.0	456.7	1096.2	581.1	12.7	418.8	1005.3	627.0	10.5	372.2	893.5	711.6	8.4
	48	550.2	1319.0	494.7	18.4	509.9	1222.2	549.9	15.9	474.1	1136.6	590.4	13.6	433.6	1039.5	638.6	11.2	385.0	923.0	725.4	8.9
	50	569.0	1362.5	503.9	19.5	527.3	1262.4	560.7	16.9	490.8	1175.2	600.9	14.4	448.3	1073.3	651.1	11.9	399.6	956.9	737.2	9.5
APSa 500-3	40	492.2	1187.6	486.8	15.2	455.9	1100.0	540.3	13.1	422.4	1019.0	581.1	11.1	386.2	931.8	628.4	9.2	342.1	825.3	716.5	7.3
	42	511.5	1231.8	496.8	16.3	473.5	1140.2	551.8	14.0	439.6	1058.7	591.1	11.9	400.6	964.6	641.5	9.8	354.5	853.7	730.6	7.8
	44	529.3	1272.6	506.0	17.3	490.0	1178.0	562.6	14.9	455.0	1093.8	602.9	12.7	414.6	996.8	654.3	10.4	367.4	883.2	743.9	8.3
	45	538.3	1293.1	510.6	17.8	498.2	1196.7	567.9	15.3	463.1	1112.6	609.1	13.1	422.0	1013.8	661.0	10.7	374.8	900.5	749.6	8.6
	46	547.8	1314.9	515.4	18.3	506.9	1216.9	573.6	15.8	470.7	1129.8	614.8	13.4	428.9	1029.6	667.1	11.0	382.2	917.5	755.2	8.9
	48	566.7	1358.6	525.1	19.5	524.2	1256.7	584.7	16.8	486.8	1167.1	627.1	14.3	443.6	1063.4	680.3	11.7	395.9	949.1	768.4	9.4
	50	586.1	1403.4	535.0	20.6	542.2	1298.2	596.2	17.8	503.4	1205.2	639.5	15.1	458.6	1098.1	693.7	12.4	409.4	980.3	783.3	10.0
APSa 510-3	40	501.8	1210.7	474.1	15.8	466.0	1124.3	524.0	13.7	432.3	1043.0	563.2	11.6	395.9	955.1	610.2	9.6	352.5	850.5	694.2	7.7
	42	523.1	1259.8	482.1	17.0	485.8	1169.9	533.2	14.7	450.8	1085.7	573.1	12.5	412.5	993.5	620.5	10.4	367.3	884.4	705.2	8.3
	44	542.0	1303.0	489.9	18.1	503.3	1210.1	542.3	15.7	467.2	1123.2	583.4	13.3	427.6	1028.1	631.9	11.0	380.6	915.0	718.3	8.8
	45	551.2	1324.1	494.2	18.6	511.8	1229.4	547.4	16.1	474.9	1140.7	588.9	13.7	434.6	1044.1	637.8	11.4	387.4	930.5	724.7	9.1
	46	560.9	1346.5	498.8	19.2	520.8	1250.1	552.8	16.6	483.2	1159.9	594.8	14.1	443.1	1063.7	642.9	11.8	395.1	948.4	730.3	9.4
	48	580.4	1391.3	508.0	20.4	538.6	1291.2	563.4	17.6	499.7	1197.9	606.6	15.0	459.7	1102.1	652.7	12.5	410.0	982.9	740.9	10.1
	50	600.3	1437.4	517.3	21.6	557.1	1333.9	574.4	18.7	516.9	1237.6	617.8	15.9	475.5	1138.5	665.2	13.3	424.0	1015.1	755.3	10.7
APSa 550-4	40	536.5	1294.3	504.7	7.4	497.7	1200.7	559.0	6.4	462.2	1115.1	599.7	5.5	422.2	1018.6	649.3	4.5	374.7	904.1	737.7	3.6
	42	555.6	1337.9	514.1	7.9	516.2	1243.2	568.6	6.9	479.6	1154.9	609.5	5.8	438.2	1055.2	660.1	4.8	389.1	937.1	750.0	3.8
	44	575.2	1382.9	523.7	8.4	535.6	1287.6	577.6	7.3	496.3	1193.2	621.7	6.2	453.4	1090.1	673.3	5.1	403.2	969.3	763.9	4.1
	45	585.0	1405.2	528.4	8.6	545.1	1309.4	583.4	7.5	505.1	1213.3	628.1	6.4	461.4	1108.3	680.1	5.3	411.2	987.7	769.7	4.2
	46	595.3	1429.0	533.5	8.9	554.2	1330.2	588.9	7.8	513.4	1232.5	634.2	6.6	469.1	1126.0	686.7	5.4	419.1	1006.1	775.5	4.4
	48	615.8	1476.2	543.4	9.5	573.2	1374.0	600.4	8.2	531.0	1272.9	646.8	7.0	485.1	1162.8	700.4	5.8	434.2	1040.9	789.4	4.7
	50	636.7	1524.6	553.6	10.0	592.6	1419.0	612.2	8.8	549.0	1314.4	659.7	7.4	503.7	1206.0	711.4	6.2	448.9	1074.9	804.7	4.9
APSa 580-4	40	575.5	1388.4	571.0	8.5	532.3	1284.3	634.5	7.3	491.2	1185.1	684.5	6.1	448.4	1081.8	739.9	5.1	396.3	956.2	839.9	4.0
	42	595.9	1435.1	581.8	9.0	551.2	1327.3	647.1	7.8	508.7	1224.9	698.3	6.5	465.2	1120.3	752.7	5.4	410.6	988.8	856.5	4.2
	44	616.9	1483.0	592.7	9.6	570.4	1371.3	659.9	8.3	528.0	1269.3	710.1	7.0	481.4	1157.4	767.7	5.7	425.1	1022.0	873.2	4.5
	45	626.7	1505.5	599.0	9.9	580.1	1393.6	666.3	8.5	537.8	1291.9	715.6	7.2	489.7	1176.3	775.2	5.9	432.3	1038.4	881.4	4.6
	46	635.6	1525.7	607.3	10.1	590.2	1416.8	672.9	8.8	547.4	1314.0	721.6	7.4	497.9	1195.3	782.8	6.1	440.5	1057.4	888.5	4.8
	48	657.4	1576.0	618.8	10.7	610.5	1463.5	686.2	9.3	565.5	1355.7	736.6	7.9	514.9	1234.3	798.2	6.5	457.8	1097.4	901.7	5.2
	50	679.8	1627.8	630.6	11.4	631.2	1511.3	699.7	9.9	582.3	1394.2	755.9	8.3	532.2	1274.3	813.9	6.8	473.9	1134.6	917.9	5.5
APSa 600-4	40	605.8	1461.6	577.5	6.9	563.6	1359.8	638.3	6.0	521.1	1257.3	687.7	5.1	474.6	1145.1	745.4	4.1	421.0	1015.6	844.5	3.3
	42	627.3	1510.6	588.9	7.3	583.4	1405.0	650.9	6.4	539.5	1299.3	701.7	5.4	492.5	1185.9	758.7	4.4	437.7	1054.1	857.8	3.5
	44	649.4	1561.2	600.1	7.8	603.9	1451.9	663.9	6.8	558.4	1342.3	715.9	5.7	511.5	1229.7	770.6	4.7	453.2	1089.6	874.8	3.8
	45	660.7	1587.2	605.9	8.0	614.2	1475.6	670.4	7.0	567.9	1364.2	723.0	5.9	520.6	1250.7	778.2	4.9	461.3	1108.1	883.6	3.9
	46	672.1	1613.3	611.6	8.3	624.9	1500.0	677.1	7.2	577.7	1386.8	730.3	6.1	529.3	1270.6	785.8	5.0	469.0	1125.8	892.1	4.0
	48	695.3	1666.9	623.3	8.8	646.3	1549.4	690.5	7.6	597.5	1432.3	745.1	6.4	547.5	1312.6	801.6	5.3	485.1	1162.8	909.4	4.2
	50	719.1	1721.7	635.2	9.3	666.9	1596.8	705.8	8.1	617.6	1478.8	759.9	6.8	566.1	1355.5	817.6	5.7	504.0	1206.7	923.7	4.5

LEGEND
- LWT : Leaving Water Temperature [°F]
- T.CAP : Capacity [T.R]
- PI : Power Input (Compressor only) [kW]
- GPM : Water flow rate
- WPD : Water Pressure Drop [Psi]

NOTE

All cooling capacities are based on 10°F water temperature difference between inlet and outlet water temperature.

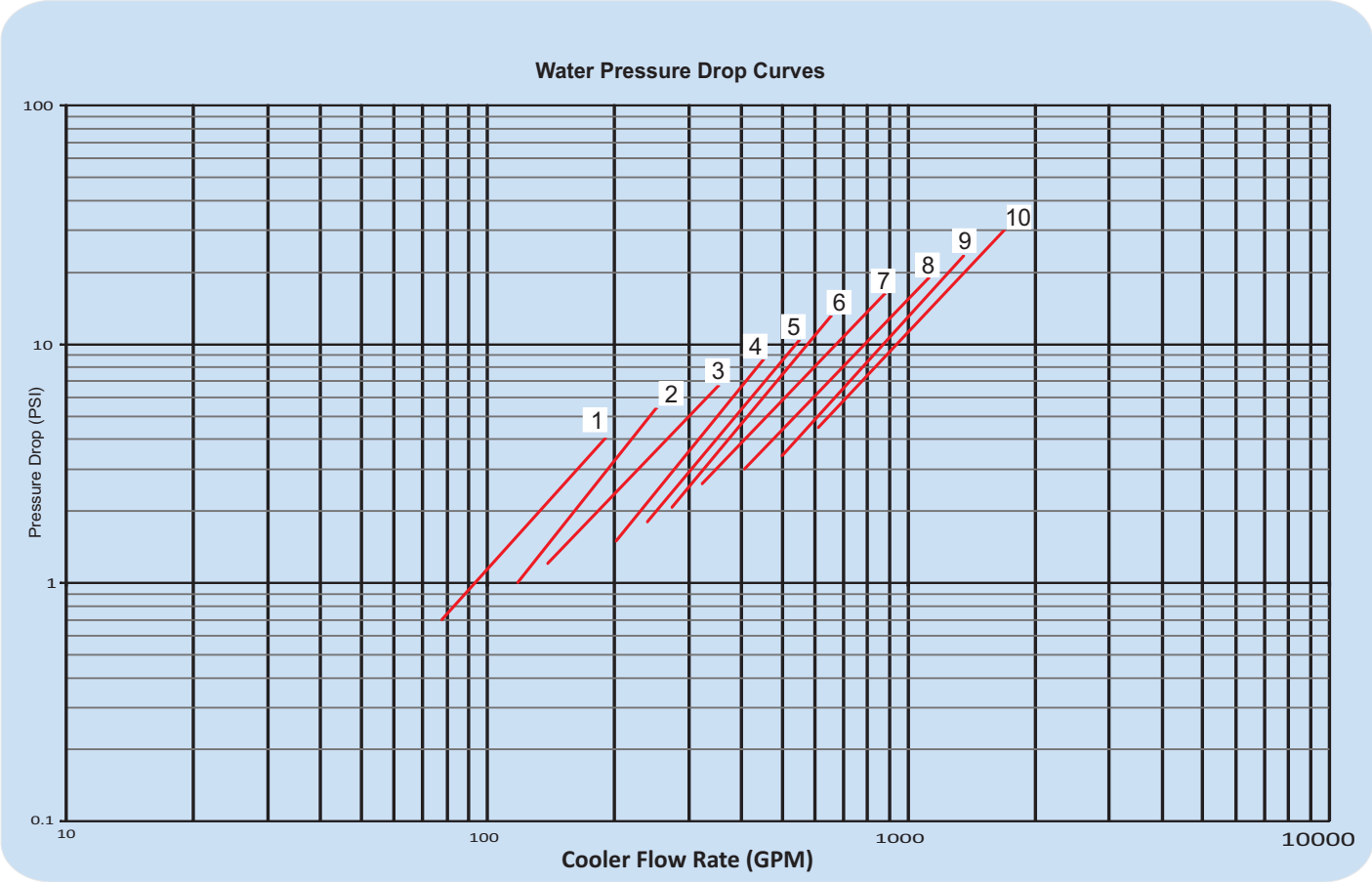

LEGEND

1	APSa (50,60,65,70-1,70-2)
2	APSa (75,80)
3	APSa (95-2,95-1,100-2,100-1,110,120,125)
4	APSa (135,140,145)
5	APSa (160,165, 175, 190)
6	APSa (195,200)
7	APSa (210,220,235,250,)
8	APSa (275,285,300,315-3,315-2)
9	APSa (235,350,235,275)
10	APSa (400,415,430,450,465,475,500-510)

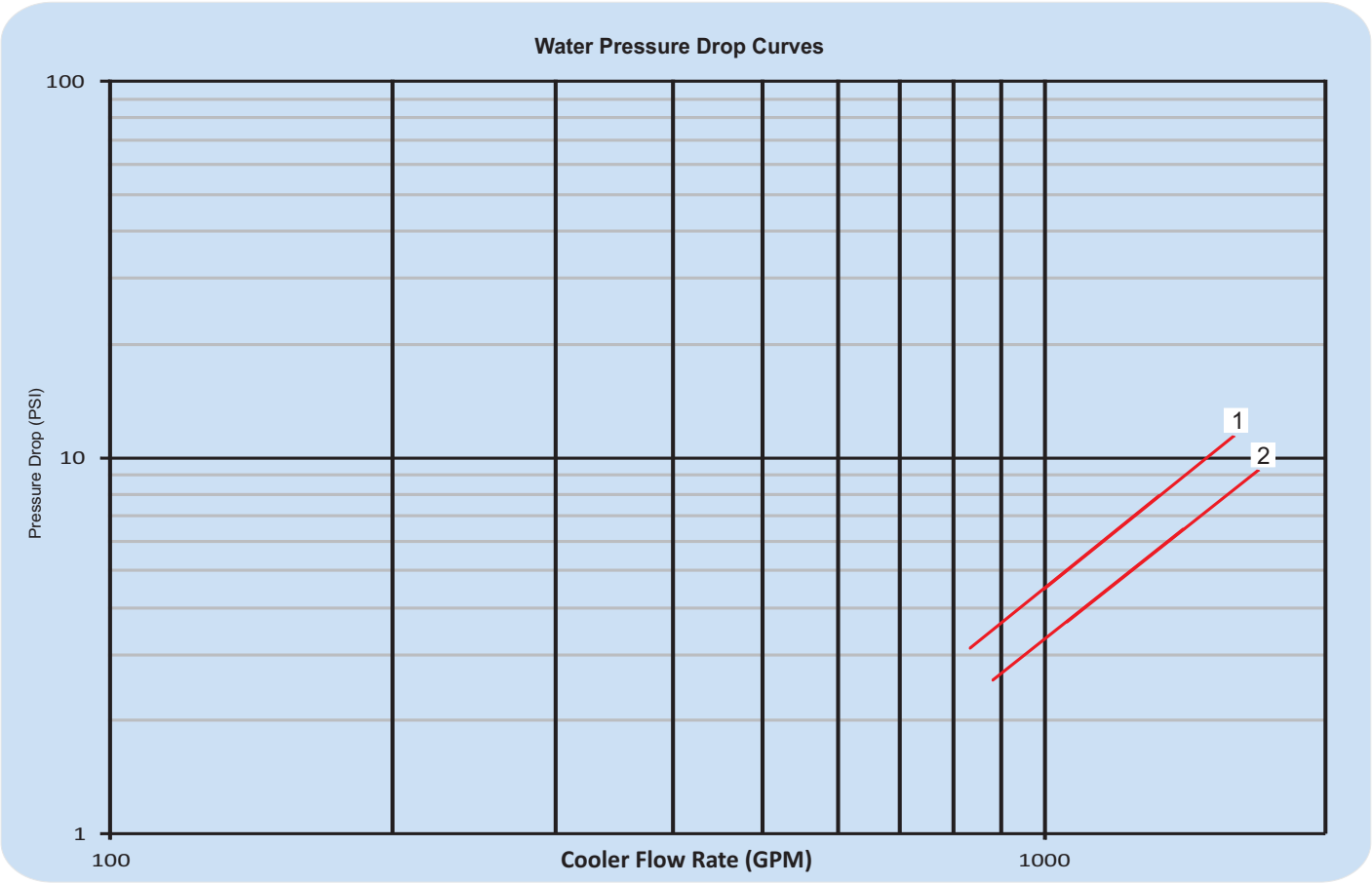

LEGEND

1 APSa (550,580)

2 APSa (600)

ELECTRICAL DATA TABLES

MODEL	POWER SUPPLY [VOLT/PH/HZ]	COMPRESSOR			CFM			MCA	MOP	MDS
		NO.	RLA	LRA	NO.	KW	FLA			
APSa 50-1	208 / 3 / 60	1	213.6	822	2	1.74	6.01	279	450	260
	380-420 / 3 / 50	1	99.5	350	2	1.52	3.1	130.5	225	125
	380 / 3 / 60	1	116.9	428	2	1.75	3.4	152.9	250	160
	460-480 / 3 / 60	1	96.6	329	2	1.95	3.6	127.9	200	125
APSa 60-1	208 / 3 / 60	1	213.6	822	4	1.74	6.01	291	500	315
	380-420 / 3 / 50	1	99.5	350	4	1.52	3.1	136.7	225	160
	380 / 3 / 60	1	116.9	428	4	1.75	3.4	159.7	250	160
	460-480 / 3 / 60	1	96.6	329	4	1.95	3.6	135.1	225	160
APSa 65-1	208 / 3 / 60	1	244.9	943	4	1.74	6.01	330.2	500	315
	380-420 / 3 / 50	1	112.3	462	4	1.52	3.1	152.7	250	160
	380 / 3 / 60	1	134	546	4	1.75	3.4	181.1	300	200
	460-480 / 3 / 60	1	110.7	423	4	1.95	3.6	152.7	250	160
APSa 70-1	208 / 3 / 60	1	263.9	943	4	1.74	6.01	353.9	600	400
	380-420 / 3 / 50	1	120.8	462	4	1.52	3.1	163.4	250	160
	380 / 3 / 60	1	144.4	546	4	1.75	3.4	194.1	300	200
	460-480 / 3 / 60	1	119.3	423	4	1.95	3.6	163.5	250	160
APSa 70-2	208 / 3 / 60	2	142.1	338	4	1.74	6.01	343.8	450	400
	380-420 / 3 / 50	2	65.4	155	4	1.52	3.1	159.5	200	200
	380 / 3 / 60	2	77.8	185	4	1.75	3.4	188.6	250	200
	460-480 / 3 / 60	2	64.3	163	4	1.95	3.6	159.1	200	200
APSa 75-1	380-420 / 3 / 50	1	136.2	475	4	1.52	3.1	182.6	300	200
	380 / 3 / 60	1	162.4	553	4	1.75	3.4	216.6	350	260
	460-480 / 3 / 60	1	134.1	497	4	1.95	3.6	182.1	300	200
APSa 80-1	380-420 / 3 / 50	1	152.1	571	4	1.52	3.1	202.5	350	200
	380 / 3 / 60	1	180.9	677	4	1.75	3.4	239.7	400	260
	460-480 / 3 / 60	1	149.4	598	4	1.95	3.6	201.1	350	200
APSa 95-2	208 / 3 / 60	2	186.7	645	4	1.74	6.01	444.1	600	600
	380-420 / 3 / 50	2	85.9	303	4	1.52	3.1	205.6	250	260
	380 / 3 / 60	2	102.2	360	4	1.75	3.4	243.5	300	260
	460-480 / 3 / 60	2	84.4	285	4	1.95	3.6	204.3	250	260
APSa 95-1	380-420 / 3 / 50	1	166.2	571	4	1.52	3.1	220.1	350	260
	380 / 3 / 60	1	198.2	677	4	1.75	3.4	261.3	450	260
	460-480 / 3 / 60	1	163.9	598	4	1.95	3.6	219.2	350	260
APSa 100-2	208 / 3 / 60	2	213.6	822	4	1.74	6.01	504.6	700	600
	380-420 / 3 / 50	2	99.5	350	4	1.52	3.1	236.2	300	260
	380 / 3 / 60	2	116.9	428	4	1.75	3.4	276.6	350	315
	460-480 / 3 / 60	2	96.6	329	4	1.95	3.6	231.7	300	260
APSa 100-1	380-420 / 3 / 50	1	187.4	615	4	1.52	3.1	246.6	400	260
	380 / 3 / 60	1	226.2	779	4	1.75	3.4	296.3	500	315
	460-480 / 3 / 60	1	186.9	646	4	1.95	3.6	248.1	400	260

NOTE

* MCA is based on 125% of the RLA for the largest motor plus 100% of the RLA/FLA for all other loads included in the circuit (NEC-Article 430-24).
* MOP is based on 225% of the RLA for the largest motor plus 100% of the RLA for all other loads included in the circuit (NEC-Article 440-22).
* MDS is based on 115% of the total summation of RLA/FLA for all loads included in the circuit (NEC-Article 440- 12A1).

.

* FOR 208/3/60 power supply in the models which not include it, please refer to PETRA FACTORY.

LEGEND

kW: Nominal Output Power (For each Fan motor)
RLA: Rated Load Ampere
FLA: Full Load Ampere (For each Fan motor)
MOP: Maximum Overcurrent Protection
MDS: Non-Fused Main Disconnect Switch
LRA: Locked Rotor Ampere
MCA: Minimum Circuit Ampacity
CFM: Condenser Fan Motor

ELECTRICAL DATA TABLES

MODEL	POWER SUPPLY [VOLT/PH/HZ]	COMPRESSOR			CFM			MCA	MOP	MDS
		NO.	RLA	LRA	NO.	KW	FLA			
APSa 110-2	208 / 3 / 60	2	213.6	822	6	1.74	6.01	516.6	700	600
	380-420 / 3 / 50	2	99.5	350	6	1.52	3.1	242.4	300	260
	380 / 3 / 60	2	116.9	428	6	1.75	3.4	283.4	400	315
	460-480 / 3 / 60	2	96.6	329	6	1.95	3.6	238.9	300	260
APSa 120-2	208 / 3 / 60	1 + 1	213.6 + 244.9	822 + 943	6	1.74	6.01	555.8	800	600
	380-420 / 3 / 50	1 & 1	99.5&112.3	350&462	6	1.52	3.1	258.4	350	315
	380 / 3 / 60	1 & 1	116.9&134	428&546	6	1.75	3.4	304.8	400	400
	460-480 / 3 / 60	1 & 1	96.6&110.7	329&423	6	1.95	3.6	256.5	350	315
APSa 125-2	208 / 3 / 60	2	244.9	943	6	1.74	6.01	587.1	800	630
	380-420 / 3 / 50	2	112.3	462	6	1.52	3.1	271.2	350	315
	380 / 3 / 60	2	134	546	6	1.75	3.4	321.9	450	400
	460-480 / 3 / 60	2	110.7	423	6	1.95	3.6	270.6	350	315
APSa 135-2	208 / 3 / 60	2	263.9	943	6	1.74	6.01	629.8	800	800
	380-420 / 3 / 50	2	120.8	462	6	1.52	3.1	290.4	400	315
	380 / 3 / 60	2	144.4	546	6	1.75	3.4	345.3	450	400
	460-480 / 3 / 60	2	119.3	423	6	1.95	3.6	290.1	400	315
APSa 140-2	380-420 / 3 / 50	2	136.2	475	6	1.52	3.1	325.1	450	400
	380 / 3 / 60	2	162.4	553	6	1.75	3.4	385.8	500	400
	460-480 / 3 / 60	2	134.1	497	6	1.95	3.6	323.3	450	400
APSa 145-2	380-420 / 3 / 50	2	136.2	475	8	1.52	3.1	331.2	450	400
	380 / 3 / 60	2	162.4	553	8	1.75	3.4	392.6	500	600
	460-480 / 3 / 60	2	134.1	497	8	1.95	3.6	330.5	450	400
APSa 160-2	380-420 / 3 / 50	1 & 1	136.2&152.1	475&571	8	1.52	3.1	351.1	500	400
	380 / 3 / 60	1 & 1	162.4&180.9	553&677	8	1.75	3.4	415.7	500	600
	460-480 / 3 / 60	1 & 1	134.1&149.4	497&598	8	1.95	3.6	349.6	450	400
APSa 165-2	380-420 / 3 / 50	2	152.1	571	8	1.52	3.1	367.1	500	400
	380 / 3 / 60	2	180.9	677	8	1.75	3.4	434.2	600	600
	460-480 / 3 / 60	2	149.4	598	8	1.95	3.6	364.9	500	400
APSa 175-2	380-420 / 3 / 50	2	166.2	571	8	1.52	3.1	398.7	500	600
	380 / 3 / 60	2	198.2	677	8	1.75	3.4	473.1	600	600
	460-480 / 3 / 60	2	163.9	598	8	1.95	3.6	397.5	500	600
APSa 190-2	380-420 / 3 / 50	2	166.2	571	10	1.52	3.1	404.9	500	600
	380 / 3 / 60	2	198.2	677	10	1.75	3.4	479.9	600	600
	460-480 / 3 / 60	2	163.9	598	10	1.95	3.6	404.7	500	600
APSa 195-2	380-420 / 3 / 50	2	178.3	615	8	1.52	3.1	425.9	600	600
	380 / 3 / 60	2	214.5	779	8	1.75	3.4	509.8	700	600
	460-480 / 3 / 60	2	177.2	646	8	1.95	3.6	427.5	600	600
APSa 200-2	380-420 / 3 / 50	2	178.3	615	10	1.52	3.1	432.7	600	600
	380 / 3 / 60	2	214.5	779	10	1.75	3.4	516.6	700	600
	460-480 / 3 / 60	2	177.2	646	10	1.95	3.6	434.7	600	600

NOTE

* MCA is based on 125% of the RLA for the largest motor plus 100% of the RLA/FLA for all other loads included in the circuit (NEC-Article 430-24).
* MOP is based on 225% of the RLA for the largest motor plus 100% of the RLA for all other loads included in the circuit (NEC-Article 440-22).
* MDS is based on 115% of the total summation of RLA/FLA for all loads included in the circuit (NEC-Article 440- 12A1).

.

* FOR 208/3/60 power supply in the models which not include it, please refer to PETRA FACTORY.

LEGEND

kW: Nominal Output Power (For each Fan motor)
RLA: Rated Load Ampere
FLA: Full Load Ampere (For each Fan motor)
MOP: Maximum Overcurrent Protection
MDS: Non-Fused Main Disconnect Switch
LRA: Locked Rotor Ampere
MCA: Minimum Circuit Ampacity
CFM: Condenser Fan Motor

ELECTRICAL DATA TABLES

MODEL	POWER SUPPLY [VOLT/PH/HZ]	COMPRESSOR			CFM			MCA	MOP	MDS
		NO.	RLA	LRA	NO.	KW	FLA			
APSa 210-2	380-420 / 3 / 50	2	187.4	615	8	1.52	3.1	446.4	600	600
	380 / 3 / 60	2	226.2	779	8	1.75	3.4	536.1	700	600
	460-480 / 3 / 60	2	186.9	646	8	1.95	3.6	449.3	600	600
APSa 220-2	380-420 / 3 / 50	2	187.4	615	10	1.52	3.1	452.6	600	600
	380 / 3 / 60	2	226.2	779	10	1.75	3.4	542.9	700	600
	460-480 / 3 / 60	2	186.9	646	10	1.95	3.6	456.5	600	600
APSa 235-2	380-420 / 3 / 50	1 & 1	221.7&187.4	447&615	10	1.52	3.1	495.5	700	600
	380 / 3 / 60	1 & 1	264.9&226.2	583&779	10	1.75	3.4	591.3	800	800
	460-480 / 3 / 60	1 & 1	218.8&186.9	467&646	10	1.95	3.6	496.4	700	600
APSa 250-2	380-420 / 3 / 50	2	221.7	447	10	1.52	3.1	529.8	700	600
	380 / 3 / 60	2	264.9	583	10	1.75	3.4	630.1	800	800
	460-480 / 3 / 60	2	218.8	467	10	1.95	3.6	528.3	700	600
APSa 275-2	380-420 / 3 / 50	1 & 1	221.7&243.8	447&477	10	1.52	3.1	557.4	800	600
	380 / 3 / 60	1 & 1	264.9&290	583&643	10	1.75	3.4	661.4	800	800
	460-480 / 3 / 60	1 & 1	218.8&239.9	467&498	10	1.95	3.6	554.6	700	600
APSa 285-2	380-420 / 3 / 50	2	243.8	477	10	1.52	3.1	579.5	800	600
	380 / 3 / 60	2	290	643	10	1.75	3.4	686.5	800	800
	460-480 / 3 / 60	2	239.6	498	10	1.95	3.6	575.1	800	600
APSa 300-2	380-420 / 3 / 50	2	243.8	477	12	1.52	3.1	585.7	800	800
	380 / 3 / 60	2	290	643	12	1.75	3.4	693.3	800	800
	460-480 / 3 / 60	2	239.6	498	12	1.95	3.6	582.3	800	800
APSa 315-3	380-420 / 3 / 50	1 & 2	178.3&187.4	615&615	12	1.52	3.1	637.1	800	800
	380 / 3 / 60	1 & 2	214.5&226.2	779&779	12	1.75	3.4	764.2	800	1000
	460-480 / 3 / 60	1 & 2	177.2&186.9	646&646	12	1.95	3.6	640.9	800	800
APSa 315-2	380-420 / 3 / 50	1 & 1	243.8&291.8	447&663	12	1.52	3.1	645.7	800	800
	380 / 3 / 60	1 & 1	290&349.4	643&823	12	1.75	3.4	767.5	1000	800
	460-480 / 3 / 60	1 & 1	239.6&288.6	498&693	12	1.95	3.6	643.5	800	800
APSa 335-2	380-420 / 3 / 50	2	291.8	663	12	1.52	3.1	693.7	800	800
	380 / 3 / 60	2	349.4	823	12	1.75	3.4	826.9	1000	1000
	460-480 / 3 / 60	2	288.6	693	12	1.95	3.6	692.5	800	800
APSa 350-3	380-420 / 3 / 50	2 & 1	187.4&221.7	615&447	14	1.52	3.1	695.3	800	800
	380 / 3 / 60	2 & 1	226.2&264.9	779&583	14	1.75	3.4	831.1	1000	1000
	460-480 / 3 / 60	2 & 1	186.9&218.8	646&467	14	1.95	3.6	697.7	800	800
APSa 375-3	380-420 / 3 / 50	1 & 2	187.4&221.7	615&447	14	1.52	3.1	729.6	800	800
	380 / 3 / 60	1 & 2	226.2&264.9	779&583	14	1.75	3.4	869.8	1000	1000
	460-480 / 3 / 60	1 & 2	186.9&218.8	646&467	14	1.95	3.6	729.6	800	800

NOTE

* MCA is based on 125% of the RLA for the largest motor plus 100% of the RLA/FLA for all other loads included in the circuit (NEC-Article 430-24).
* MOP is based on 225% of the RLA for the largest motor plus 100% of the RLA for all other loads included in the circuit (NEC-Article 440-22).
* MDS is based on 115% of the total summation of RLA/FLA for all loads included in the circuit (NEC-Article 440- 12A1).

.

* FOR 208/3/60 power supply in the models which not include it, please refer to PETRA FACTORY.

LEGEND

kW: Nominal Output Power (For each Fan motor)
RLA: Rated Load Ampere
FLA: Full Load Ampere (For each Fan motor)
MOP: Maximum Overcurrent Protection
MDS: Non-Fused Main Disconnect Switch
LRA: Locked Rotor Ampere
MCA: Minimum Circuit Ampacity
CFM: Condenser Fan Motor

ELECTRICAL DATA TABLES

MODEL	POWER SUPPLY [VOLT/PH/HZ]	COMPRESSOR			CFM			MCA	MOP	MDS
		NO.	RLA	LRA	NO.	KW	FLA			
APSa 400-3	380-420 / 3 / 50	3	221.7	447	16	1.52	3.1	770.1	800	1000
	380 / 3 / 60	3	264.9	583	16	1.75	3.4	915.3	1000	1000
	460-480 / 3 / 60	3	218.8	467	16	1.95	3.6	768.7	800	1000
APSa 415-3	380-420 / 3 / 50	3	243.8	477	16	1.52	3.1	841.9	1000	1000
	380 / 3 / 60	3	290	643	16	1.75	3.4	996.9	1200	1200
	460-480 / 3 / 60	3	239.6	498	16	1.95	3.6	836.3	1000	1000
APSa 430-3	380-420 / 3 / 50	3	243.8	477	18	1.52	3.1	848.1	1000	1000
	380 / 3 / 60	3	290	643	18	1.75	3.4	1003.7	1200	1200
	460-480 / 3 / 60	3	239.6	498	18	1.95	3.6	843.5	1000	1000
APSa 450-3	380-420 / 3 / 50	2 & 1	243.8&291.8	447&663	16	1.52	3.1	901.9	1000	1000
	380 / 3 / 60	2 & 1	290&349.4	643&823	16	1.75	3.4	1071.1	1200	1200
	460-480 / 3 / 60	2 & 1	239.6&288.6	498&693	16	1.95	3.6	897.5	1000	1000
APSa 465-3	380-420 / 3 / 50	2 & 1	243.8&291.8	447&663	18	1.52	3.1	908.1	1000	1000
	380 / 3 / 60	2 & 1	290&349.4	643&823	18	1.75	3.4	1077.9	1200	1200
	460-480 / 3 / 60	2 & 1	239.6&288.6	498&693	18	1.95	3.6	904.7	1000	1000
APSa 475-3	380-420 / 3 / 50	1 & 2	243.8&291.8	447&663	18	1.52	3.1	956.1	1200	1200
	380 / 3 / 60	1 & 2	290&349.4	643&823	18	1.75	3.4	1137.3	1200	1250
	460-480 / 3 / 60	1 & 2	239.6&288.6	498&693	18	1.95	3.6	953.7	1200	1200
APSa 500-3	380-420 / 3 / 50	3	291.8	663	18	1.52	3.1	1004.1	1200	1200
	380 / 3 / 60	3	349.4	823	18	1.75	3.4	1196.7	1200	1600
	460-480 / 3 / 60	3	288.6	693	18	1.95	3.6	1002.7	1200	1200
APSa 510-3	380-420 / 3 / 50	3	291.8	663	20	1.52	3.1	1010.3	1200	1200
	380 / 3 / 60	3	349.4	823	20	1.75	3.4	1203.5	1600	1600
	460-480 / 3 / 60	3	288.6	693	20	1.95	3.6	1009.9	1200	1200
APSa 550-4	380-420 / 3 / 50	4	221.7	447	20	1.52	3.1	1004.2	1200	1200
	380 / 3 / 60	4	264.9	583	20	1.75	3.4	1193.8	1200	1600
	460-480 / 3 / 60	4	218.8	467	20	1.95	3.6	1001.9	1200	1200
APSa 580-4	380-420 / 3 / 50	4	243.8	477	20	1.52	3.1	1098.1	1200	1200
	380 / 3 / 60	4	290	643	20	1.75	3.4	1300.5	1600	1600
	460-480 / 3 / 60	4	239.6	498	20	1.95	3.6	1090.3	1200	1200
APSa 600-4	380-420 / 3 / 50	4	243.8	477	20	1.52	3.1	1098.1	1200	1200
	380 / 3 / 60	4	290	643	20	1.75	3.4	1300.5	1600	1600
	460-480 / 3 / 60	4	239.6	498	20	1.95	3.6	1090.3	1200	1200

NOTE

* MCA is based on 125% of the RLA for the largest motor plus 100% of the RLA/FLA for all other loads included in the circuit (NEC-Article 430-24).
* MOP is based on 225% of the RLA for the largest motor plus 100% of the RLA for all other loads included in the circuit (NEC-Article 440-22).
* MDS is based on 115% of the total summation of RLA/FLA for all loads included in the circuit (NEC-Article 440- 12A1).

.

* FOR 208/3/60 power supply in the models which not include it, please refer to PETRA FACTORY.

LEGEND

kW: Nominal Output Power (For each Fan motor)
RLA: Rated Load Ampere
FLA: Full Load Ampere (For each Fan motor)
MOP: Maximum Overcurrent Protection
MDS: Non-Fused Main Disconnect Switch
LRA: Locked Rotor Ampere
MCA: Minimum Circuit Ampacity
CFM: Condenser Fan Motor

Control Diagram

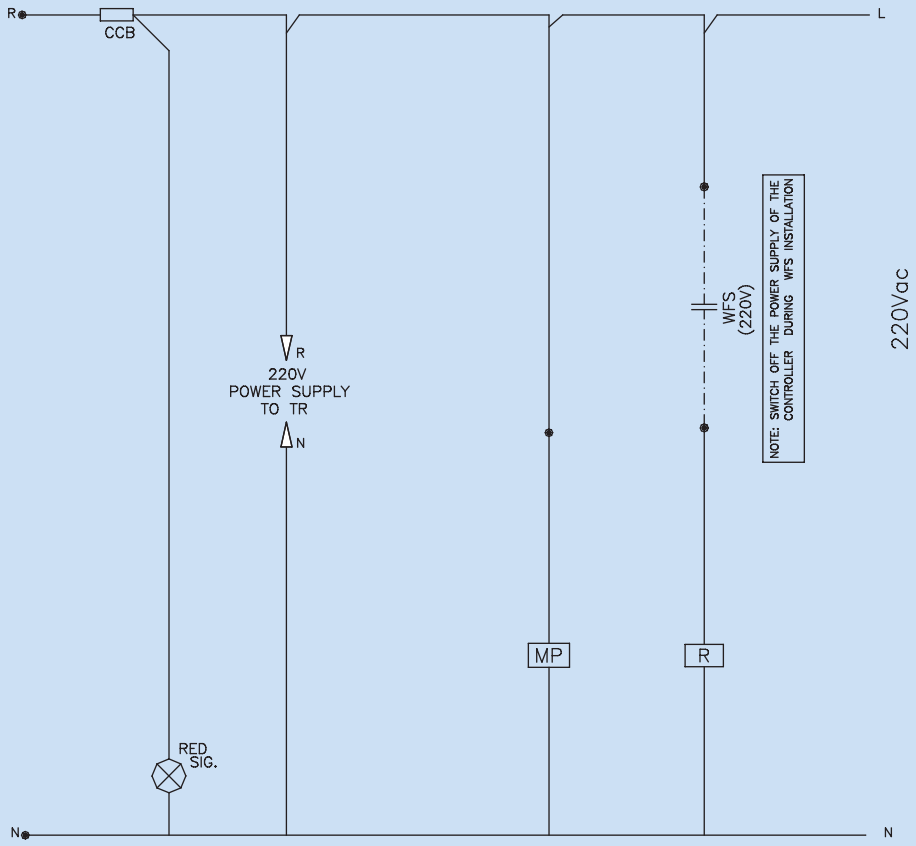

WARNING : RISK OF ELECTRIC SHOCK CAN CAUSE INJURY OR DEATH: DISCONNECT ALL REMOTE ELECTRIC POWER SUPPLIES BEFORE SERVICING.

Control Diagram

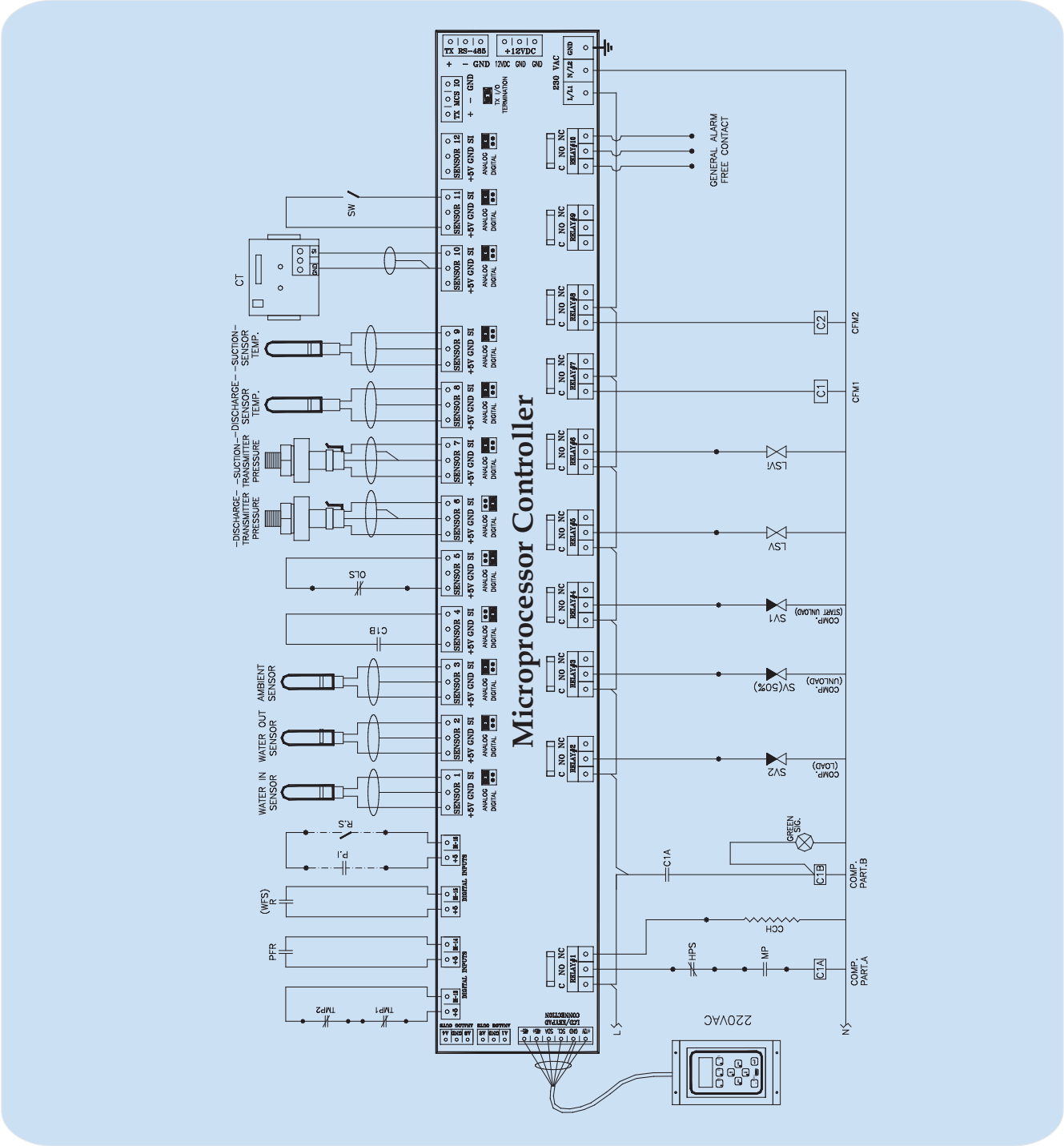

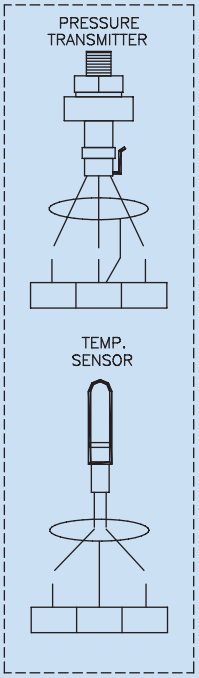

Lists & Tables

LEGEND			
COMP.	Compressor	HPS	High Pressure Switch.
CFM	Condenser Fan Motor	TR	Transformer
CCB	Control Circuit Breaker.	R.S	Remote Switch
TMP	Thermal Motor Protector.	OLS	Oil Level Switch
C	Contactor.	SV	Sliding Valve
PFR	Phase Failure Relay.	WFS	Water \flow Switch
CCH	Crankcase Heater.	LSVi	Liquid Solenoid Valve Injection
LSV	Liquid Solenoid Valve.	⊛n	Terminal Number.
MP	Motor Protector	⊗	Signal Lamp
PI	Pump Interlock	Wn	Wiring Number.
CT	Current Transformer	———	Field Connection.
SW	Switch		

PFR INDICATOR LIGHT DIAGNOSTICS	
RUN	GREEN
RESTART DELAY	GREEN
REVERSE PHASE	RED
UNBALANCE / SINGLE PHASE	RED
HIGH / LOW VOLTAGE	RED

MCS DISPLAY

ALARM:
1* IN CASE OF " COMP. PROOF" ALARM MESSAGE FOR ANY CIRCUIT
CHECK: HPS, MP, (EXD ALARM) RELATED TO THAT CIRCUIT
2* IN CASE OF "FREEZE" ALARM IT MEANS ONE OF THE FOLLOWING:
- FREEZE CONDITION
- WATER OUT SENSOR ISN'T CONNECTED OR DOESN'T OPERATE

LEGEND

DISC.P: DISCHARGE PRESSURE
SUC.P: SUCTION PRESSURE
DISC.T: DISCHARGE TEMPERATURE
SUC.T: SUCTION TEMPERATURE

Power Diagram

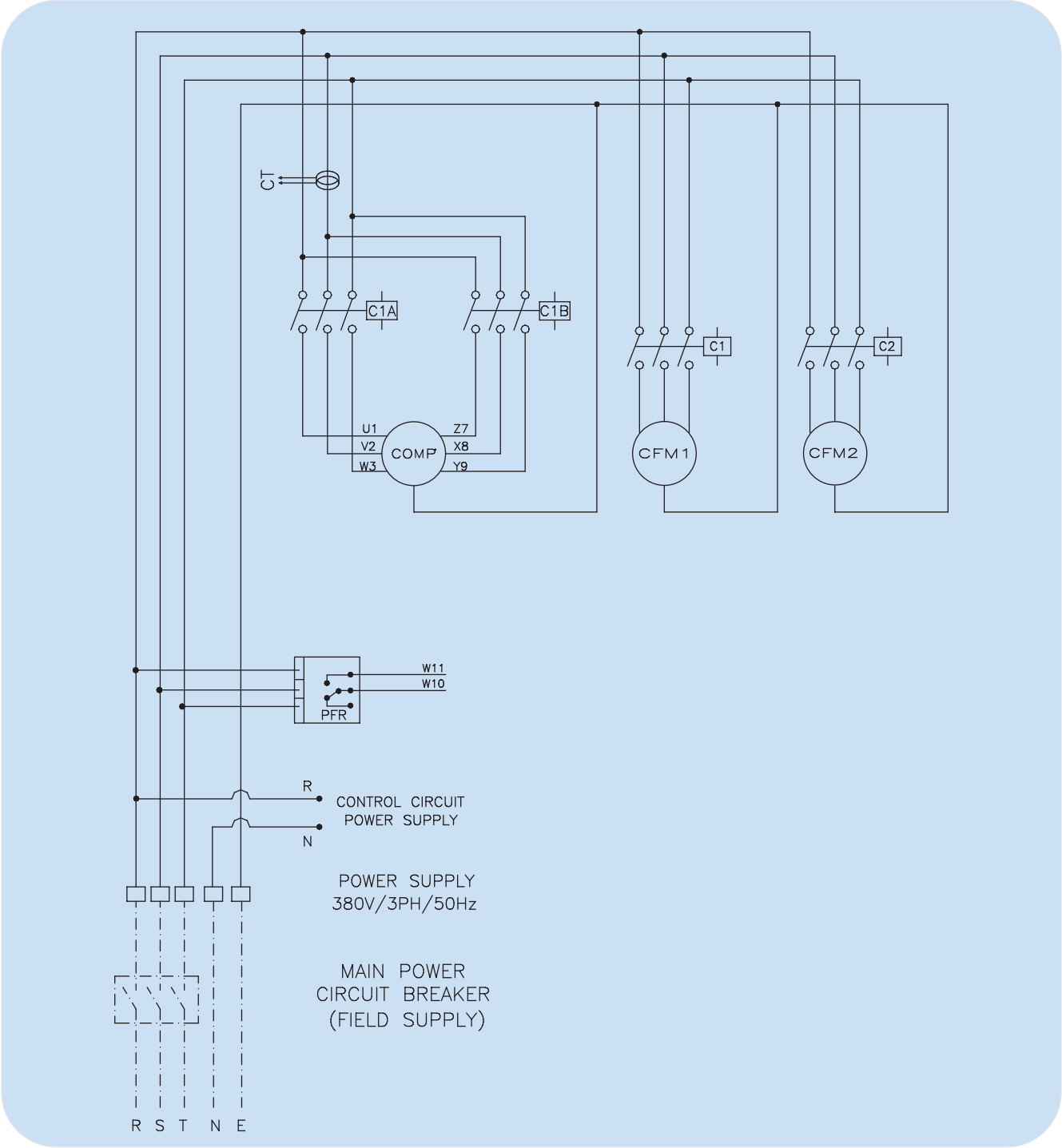

PETRA

Petra Engineering Industries Co.

www.petra-eng.com

Manufacturer reserves the right to discontinue, or change at any time, specifications or designs without notice and without incurring obligations.

APSa Aug. 2011 R.0 Supersedes Jan 2010 R.1